WABCO

INTERNAL CORRESPONDENCE / SIGNAL & COMMUNICATIONS DIVISION

DATE: AUGUST 22, 1969

TO:

C. B. RAMSDELL	A. E. JONES	L. P. TRACEY
C. F. WERT	C. E. STIPANCIC	L. G. PHILLIPS
A. HOOGERHYDE	R. M. KAROW	I. F. CADMAN
W. T. O'BRIEN	G. E. STINSON	A. F. O'ROURKE
V. J. POREMBA	P. J. GRAHAM	L. A. DAMASIO
F. G. MILLER	R. H. TOMLINSON	W. J. WALKER
H. A. WILLIAMSON	W. R. FISHER	F. A. GASBARRO
L. J. DAVIS	S. J. COLCOMB	

LAST TO RETIRE (97?) AS OF 11/99

FROM: J. W. HANSEN

SUBJECT: SALES MANUAL

ATTACHED IS THE SIGNAL AND COMMUNICATIONS DIVISION SALES MANUAL. THE FIRST ISSUANCES FOR THIS MANUAL ARE INCLUDED IN IT PROPERLY FILED. YOU WILL PERIODICALLY RECEIVE ISSUANCES TO UP-DATE AND/OR COMPLETE THE MANUAL.

THIS MANUAL IS FOR INTERNAL USE ONLY.

ANY COMMENT, QUESTIONS OR INPUTS SHOULD BE FORWARDED TO J. W. HANSEN FOR INCLUSION IN THE MANUAL.

PM/TF

WABCO

SALES MANUAL

WESTINGHOUSE AIR BRAKE COMPANY
SIGNAL & COMMUNICATIONS DIVISION
Swissvale Post Office, Pittsburgh, Pa. 15218
An American-Standard Company

DATE: 8/25/70
ISSUANCE: 1.0
PAGE: 1 of 1
Replaces Issuance Dated
8/15/69

SUBJECT: Index - INTRODUCTION Section

Issuance	Subject	Date
1.1	Purpose & Scope	8/15/69
1.11	Distribution	8/15/69
1.2	Numerical Filing Index	8/15/69
1.3	Procedures For Filing Issuances	8/15/69

APPROVED

WABCO

SALES MANUAL

WESTINGHOUSE AIR BRAKE COMPANY
SIGNAL & COMMUNICATIONS DIVISION
Swissvale Post Office, Pittsburgh, Pa. 15218

SUBJECT: Purpose and Scope

One of the long-recognized deficiencies in this division has been the lack of a sales policy program. Both headquarters and field personnel have often requested a set of rules for governing sales policies, practices and procedures. Therefore, with this manual, we have attempted to organize a simple yet flexible system for regulating all marketing procedures.

This manual is intended to formulate specific directives regarding administration, strategies, and responsibilities for all marketing functions. It is to be used as a guide in all aspects of marketing, and the directives and forms issued herein are to be regarded as division policy and are to be followed implicitly.

Additions will be made periodically, and updated issuances will be distributed when policies change or become obsolete.

If all Marketing and Sales Personnel strive to follow the regulations set forth in this Sales Manual, we shall soon realize a more concordant and, therefore, a more efficient organization.

APPROVED

WABCO

SALES MANUAL

WESTINGHOUSE AIR BRAKE COMPANY
SIGNAL & COMMUNICATIONS DIVISION
Swissvale Post Office, Pittsburgh, Pa. 15218

SUBJECT: Numerical Filing Index

1.0 Index INTRODUCTION Section
1.1 Purpose and Distribution
1.2 Numerical Filing Index
1.3 Procedures for filing Issuances

2.0 Index ADMINISTRATION Section
2.1 Objectives, Policies and Procedures - General
2.2 Personnel Administration

2.21 Recruiting
2.22 Training
2.23 Compensation
2.24 Expense Accounts
2.25 Performance Analysis
2.26 Job Descriptions

2.3 Organization
2.4 Customer Account Assignments
2.5 Forecasts
2.6 Expense Budgets
2.7 Information Security
2.8 Correspondence Handling Procedures
2.9 Correspondence Identification

3.0 Index SALES STRATEGY Section
3.1 Objectives, Policies and Procedures - General
3.2 Territorial and Account Development and Expansion
3.3 Marketing Plans

APPROVED _____

3.31 General
3.32 Railroad
3.33 Industrial
3.34 Rapid Transit
3.35 Communications
3.36 Controls

4.0 Index PRICING Section
4.1 Objectives, Policies and Procedures - General
4.2 Terms of Sales
4.3 Financing
4.4 Deferred Payment Plans
4.5 Pricing Policies

4.51 General
4.52 Railroad
4.53 Industrial
4.54 Rapid Transit
4.55 Communications
4.56 Controls

5.0 Index MARKET RESEARCH AND PRODUCT PLANNING Section
5.1 Objectives, Policies and Procedures - General
5.2 Customer Activity
5.3 Economic/Operational Studies
5.4 New Product Programs (DV)
5.5 New Product Suggestions Procedures

6.0 Index INQUIRIES, ESTIMATES, QUOTATIONS AND DELIVERY Section
6.1 Procedures for Handling Inquiries, Estimates and Quotations
6.2 Procedures for obtaining Ordering References
6.3 Procedures for obtaining Product Information
6.4 Procedures for obtaining Delivery Information

APPROVED_____

7.0 Index COMPETITIVE ACTIVITY AND ANALYSIS Section
7.1 Objectives, Policies and Procedures - General
7.2 Lost Business Reports
7.3 Market Share Reports

8.0 Index ENGINEERING COORDINATION Section
8.1 Objectives, Policies and Procedures - General
8.2 Relations with Research and Engineering Department
8.4 Field Installation Service

9.0 Index MARKETING COMMUNICATIONS Section
9.1 Objectives, Policies and Procedures - General
9.2 Advertising
9.3 Sales Literature and Promotion
9.4 Product Publicity
9.5 Public Relations
9.6 Shows, Exhibits, Conventions, and Meetings
9.7 Product Catalogs
9.8 Service Literature

10.0 Index CORPORATE AND DIVISION GENERAL POLICIES Section
10.1 Objectives, Policies and Procedures - General

11.0 Index GOVERNMENT ACTIVITIES Section
11.1 Objectives, Policies and Procedures - General
11.2 Department of Transportation

11.21 Federal Railroad Administration
11.211 Bureau of Safety - RS&I
11.22 Federal Highway Administration
11.23 Bureau of Public Roads
11.24 Others

APPROVED _____

11.3 State PUCs

12.0 Index MISCELLANEOUS Section

APPROVED_____

WABCO

SALES MANUAL

WESTINGHOUSE AIR BRAKE COMPANY
SIGNAL & COMMUNICATIONS DIVISION
Swissvale Post Office, Pittsburgh, Pa. 15218

SUBJECT: Procedures for Filing Issuances

This manual has been divided into distinct and specific categories to facilitate ease of filing and retrieval of information.

In the upper right-hand corner of each issuance a number appears which corresponds with the numbers in the Numerical Filing Index and indicates where the issuance should be filed. The first digit (preceding the decimal point) shows the section in which the issuance should be filed as indicated by the tabs in the Sales Manual. For example, section 3 is Sales Strategy and an issuance numbered 3.34 should be filed under this section.

The issuances are filed in numerical order within each section. Two or more issuances having the same number should be filed with the most recent date first. If an issuance is distributed which rescinds a previous one, the first issuance should be removed from the manual. Any forms should be filed in the same manner as the issuances as they will have form numbers corresponding to the issuance numbers.

APPROVED _____

WABCO

SALES MANUAL

WESTINGHOUSE AIR BRAKE COMPANY
SIGNAL & COMMUNICATIONS DIVISION
Swissvale Post Office, Pittsburgh, Pa. 15218

DATE: 6/2/71
ISSUANCE: 1.11
PAGE: 1 of 1
Replaces Issuance Dated 3/1/71

SUBJECT: Distribution

This manual will be distributed to the following only:

C.B. Ramsdell	E.R. Callender
C.F. Wert	E.O. Garrett
G.E. Stinson	D.D. Huffman
C.H. Mertz	R.E. Morris
V.J. Poremba	H.H. Gudenrath
F.G. Miller	E.R. Dubas
H.A. Williamson	H.W. Erikson
F.A. Gasbarro	B.J. Malloy
E.G. Larson	W.T. Goff
J.W. Hansen	R.C. Clark
L.J. Davis, Jr.	K.M. Gaus
A.E. Jones	A. Johnson
C.E. Stipancic	C.E. Shepherd
R.M. Karow	J.P. Matthews
W.J. Walker	G.J. Cullum
P.J. Graham	I.F. Cadman
E.C. Dwyer	A.F. O'Rourke
W.R. Fisher	P.L. Riches
L.G. Phillips	C.E. Cressman
L.A. Damasio	F. Galdes

APPROVED

WABCO

SALES MANUAL

WESTINGHOUSE AIR BRAKE COMPANY
SIGNAL & COMMUNICATIONS DIVISION
Swissvale Post Office, Pittsburgh, Pa. 15218
An American-Standard Company

SUBJECT: Index - ADMINISTRATION Section

Issuance	Subject	Date
2.1	Relations With Suppliers & Customers	1/21/70
2.22	Visit From A Goddess	8/15/69
2.3	Marketing Department Responsibilities	2/2/70
2.31	Railway Marketing Section General Province Guidelines	5/8/70
2.5	Sales Forecasting Procedures - Monthly Order Bookings Forecast	8/15/69
2.71	Disclosure of Innovative Ideas in Sales Proposals	3/27/70
2.8	Correspondence Handling Procedures between Regional Office & Headquarters	3/27/70
2.81	Requests For Prints Of Engineering Drawings	1/21/70

APPROVED

WABCO

SALES MANUAL

WESTINGHOUSE AIR BRAKE COMPANY
SIGNAL & COMMUNICATIONS DIVISION
Swissvale Post Office, Pittsburgh, Pa. 15218

SUBJECT: RELATIONS WITH SUPPLIERS & CUSTOMERS

GENERAL

We recognize that the suppliers and customers of WABCO are important to our operations and that warm and friendly relations between WABCO personnel and representatives of our suppliers and customers are desirable. However, these relations should be kept strictly within the bounds of propriety and good taste and should not be permitted to influence any acquisition policy or act of WABCO.

POLICY

No executive or employee of WABCO shall accept or give any gift or gratuity to or from third persons which might conceivably tend to induce him to violate his duties to WABCO. Gifts, payments, entertainment, transportation, loans, expense reimbursement, or other favors of more than token value shall not be accepted by any such employee or any member of his family from any individual or concern that is or may become a supplier or party to a contract with WABCO. The same restrictions apply to dealings with our customers.

In general, the relationships should not go beyond common courtesies usually associated with accepted business practice and should be avoided if they can conceivably place the employee under obligation to anyone who does or solicits business with WABCO.

RESPONSIBILITY

Primarily, Purchasing & Marketing Department personnel represent WABCO with suppliers and customers, but representatives of other segments of WABCO have important relations with those persons and should be governed by the same principles.

General Managers of Divisions & Managers of Staff Departments shall be responsible for enforcing this policy and taking suitable steps, including dismissal where appropriate, to avoid infractions.

APPROVED 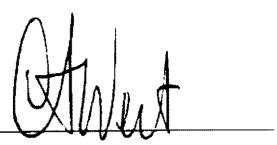

WABCO

SALES MANUAL

WESTINGHOUSE AIR BRAKE COMPANY
SIGNAL & COMMUNICATIONS DIVISION
Swissvale Post Office, Pittsburgh, Pa. 15218

SUBJECT: Visit From A Goddess

A soft, insinuating, love-laden voice said, "Am I intruding?"

I looked up from my desk and nearly slid onto the floor. Standing there, more lovely than any picture, was every man's forbidden dream-Raquel Welch.

Her soft chestnut hair, hanging loosely to her shoulders, shimmered in the sunlight from the window. Her eyes were deep and clear, and their come-hither look was both sympathetic and understanding. Her full red lips were parted just slightly, almost as if, inside, she were panting with excitement. Her yellow-gold knit dress was form-tight, clearly outlining her high, firm bosom, her flat stomach, her exquisitely rounded hips, and her splendidly symmetrical thighs.

I recovered only enough to ask, "Won't you sit down?"

She crossed her legs, and then I noticed.

Beneath her micro-mini skirt, instead of stockings, she was wearing ankle socks that came up only two inches above her shoes. Above them, her legs were covered with a thick, matted growth of black hair.

I threw up in the waste basket.

MORAL: A magnificent edifice can be destroyed by its underpinnings.

APPROVED 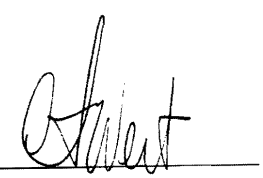

Of course, we all get the point of the story. However, sometimes we slip and forget some of the subtleties which could possibly mean the difference between securing or losing an order.

Let's keep a checklist just for reference.

1. Avoid wearing socks which allow your legs to show between the trousers and the tops of the socks.

2. Always wear a clean, pressed business suit when meeting a prospective customer - whether in his office or yours.

3. Cleanliness is next to Godliness, but keeping that way should be done in private, i.e. cleaning fingernails, noses, ears, or scratching.

4. Never smoke in a stranger's office unless and until he does. And especially avoid pipes and cigars as they are quite offensive to some people.

5. Never smoke during a sales presentation.

6. Remember a well-groomed appearance can be a great psychological advantage when you are trying to sell products of our company ---- which you represent.

APPROVED _____

P.L. Riches

WABCO

SALES MANUAL

UNION SWITCH & SIGNAL DIVISION
WESTINGHOUSE AIR BRAKE COMPANY
Swissvale, PA 15218

SUBJECT: Marketing Department Responsibilities

Business area responsibilities listed on the following pages are broken into specific business areas and deal with the day-to-day functions of bringing the business into the house. Marketing Managers are responsible for pricing of Products and Systems sold in respective market areas.

Product Line Responsibilities as assigned on the following pages are responsible for directing activities for product improvements, modifications, substitutions and obsolescence, etc. The responsibility includes coordination of product activities as they include market areas.

APPROVED _____

WABCO

SALES MANUAL

UNION SWITCH & SIGNAL DIVISION
WESTINGHOUSE AIR BRAKE COMPANY
Swissvale, PA 15218

Replaces Issuance
dated 3/1/71

Marketing Department

Responsibilities By Business Area

TRANSIT MARKETS	
Emerging Transit Properties	H. L. Hathaway
Transit Wayside/Supervisory Control Systems	T. C. Dougherty
Railroad Vehicle Carried Systems	R. W. Snee
Transit Vehicle Carried Systems	R. W. Snee
Vehicle Carried Equipment	R. W. Snee
RAILROAD MARKETS	**R. M. Karow**
Computer Systems	N. M. Cole
Railroad Terminals	A. Wilson
Railroad Signaling & Supervisory Control	F. Donato
Highway Crossing Warning Systems	D. F. Remaley
SERVICE PARTS	**G. E. Byrne**
	J. Jaffurs

APPROVED _____

WABCO

SALES MANUAL

UNION SWITCH & SIGNAL DIVISION
WESTINGHOUSE AIR BRAKE COMPANY
Swissvale, PA 15218

Product Code		
01	Housings, Cases & Junction Boxes	
	A. Cases	D. F. Remaley T. C. Dougherty (Transit Specials)
	B. Houses, Junction Boxes, Cable Boxes	F. Donato
02	Supervisory Code & Data Systems	T. C. Dougherty (Transit-Single Station) F. Donato (Railroad-Multiple Station)
03	Control Panels, Consoles & Display Devices	Covered by Product Manager within his business area.
04	Relays	
	A. Plug-In	T. C. Dougherty
	Non-Vital	T. C. Dougherty
	B. Shelf	D. F. Remaley
	C. Car-Carried & EMD	R. W. Snee

APPROVED _____

WABCO

SALES MANUAL

UNION SWITCH & SIGNAL DIVISION
WESTINGHOUSE AIR BRAKE COMPANY
Swissvale, PA 15218

Product Code		
05	Train Detection Systems--General Including Appropriate Impedance Bonds	Covered by Product Manager within each business area except specials noted below.
	A. Motion Monitor, AFO, Type "C"	D. F. Remaley
	B. OCS-10, Phase Selective	F. Donato
	C. Wheel Detector, Presence Detector	A. Wilson
06	Identification Systems	
	A. Identra	T. C. Dougherty
	B. AVI	T. C. Dougherty
07	Train Control Including Mobile Power Supplies and Excluding Yard Engine Control.	R. W. Snee
08	Retarders and Yard Equipment	A. Wilson
09	Power Supplies (except mobile) Lightning Arresters	F. Donato
10	Vehicle Control Systems LSR	A. Wilson
11	Switches	
	A. Mainline Elec. & EP Elec. Lockds, Hand Throw Mechanisms and Switch Circuit Controller.	F. Donato

APPROVED _____

WABCO

SALES MANUAL

UNION SWITCH & SIGNAL DIVISION
WESTINGHOUSE AIR BRAKE COMPANY
Swissvale, PA 15218

Product Code		
11	Switches (cont'd.)	
	B. Yard Switches	A. Wilson
	C. Transit (including A21)	T. C. Dougherty
12	Signals	
	A. Mainline	F. Donato
	B. Yard	A. Wilson
	C. Transit	T. C. Dougherty
13	Grade Crossing Warning Equipment All Walpar Products (Including Signal Bridges)	D. F. Remaley
14	Accessories	Appropriate Product Manager
18	Tools	Appropriate Product Manager
19	EMD relays	R. W. Snee
20	Computer Systems, Hardware and Peripherals	N. M. Cole

APPROVED _____

WABCO

SALES MANUAL

WESTINGHOUSE AIR BRAKE COMPANY
SIGNAL & COMMUNICATIONS DIVISION
Swissvale Post Office, Pittsburgh, Pa. 15218
An American-Standard Company

Marketing Department

Staff Responsibilities Cont.

Marketing Communications	**J. W. Hansen**
Sales Proposals	P. Conte
Signed Article Program	P. Conte
Service Manuals	J. W. Hansen
Info/Serv.	J. W. Hansen
Exhibit Room/Auditorium	F. A. Evans
Literature Distribution	F. A. Evans
Forecasting, Market Share, Sales Statistics, etc.	**G. A. Zuzo**
Industry Associations & Federal Agencies	
A. A. R.	J. W. Hansen
Supt. Assn.	M. J. Shearer, Jr.
Shortline Assn.	M. J. Shearer, Jr.
DOT	C. E. Stipancic
FCC	A. E. Jones
AREA	J. W. Hansen
RPI	J. W. Hansen
ATA	J. W. Hansen

APPROVED _____

WABCO

SALES MANUAL

WESTINGHOUSE AIR BRAKE COMPANY
SIGNAL & COMMUNICATIONS DIVISION
Swissvale Post Office, Pittsburgh, Pa. 15218
An American-Standard Company

TRAIN CONTROL & SIGNALING MARKETS
GENERAL PROVINCE GUIDELINES

Train Control & Signaling Markets is charged with: protecting and advancing our market position in the railway, transit, and vehicle control markets; serving these markets in a manner consistent with this Division's profitability objectives; and providing leadership, direction and guidance to the Division as it relates to serving these markets.

Activities involve responding to customer inquiries related to operating needs, and discussing these needs with Engineering for translations into product/system solutions. When field surveys on customers' properties are required for verifying customers' needs, we must develop the study objectives and insure that the proper people are assigned to the project team. This section reviews prime recommendations and alternates with Engineering, evaluates their economic impact, and with the Sales Department develops the strategy to secure the sale.

Train Control & Signaling Markets is responsible for the preparation of estimates and proposals for answering customer inquiries. Our objective is to use, wherever possible, the existing product/system. When a new development is required, this section will coordinate such requirements with the Product Development Coordinator to insure that it is in line with Divisional objectives. It will also provide field support consistent with the marketing/sales strategy.

It reviews and approves the job scope based on Engineering and Marketing's interpretation of the customer order, and assists Engineering in development project schedules and monitoring job progress.

This section assumes the leadership role in developing the Division's short/long range objectives relative to the served market, and developes necessary Marketing plans to support these objectives.

Train Control & Signaling Markets provides short term product planning direction which involves cost reduction, minor modification and product obsolescence. It also assists the Product Development Coordinator in defining major product programs, both short/long range, as required to support Division's objectives. The above guidelines apply to the railway and transit markets where the Sales Department is charged with account responsibility.

APPROVED _____

The vehicle control market is served in the same manner as described above with the only difference being that the original equipment manufacturer sales responsibility will be handled by this section for this market. It may on occasion utilize the sales representatives for defined liaison and intelligence activities.

This section is responsible for establishing and administering pricing for all product/systems for the served markets, and provides guidance for literature preparation and advertising programs necessary to promote the product/system line.

APPROVED_____

WABCO

SALES MANUAL

WESTINGHOUSE AIR BRAKE COMPANY
SIGNAL & COMMUNICATIONS DIVISION
Swissvale Post Office, Pittsburgh, Pa. 15218

SUBJECT: Sales Forecasting Procedures-Monthly Order Bookings Forecast

Three copies of the updated Order Bookings Forecast IBM Run are sent to each regional office the first week of every month. One copy is for the regional office files; one is to be divided by accounts and distributed to the salesmen; and one is to be corrected by the regional manager and returned to headquarters by the twenty-fifth day of each month.

All corrections on the master copy, which is filled out by the regional manager and returned to headquarters, must be marked in RED.

Each salesman should carry his copy with him when he is calling on customers for reference and for updating when he acquires new information. On the third week of each month, he will give his copy to the regional manager for consolidation into the master copy to be returned to headquarters.

The criteria listed on the following pages must be used when completing the Order Bookings Forecast.

APPROVED _____

Sales Forecasting Criteria For Monthly Order Bookings Forecast

1. Include on forecast only those jobs of $10,000 and over except for rapid transit jobs, where this minimum figure will be $50,000.

2. Refer to all jobs by marketing control numbers where they are assigned.

3. Include on forecast all jobs on which we bid within the limits of No. 1 above.

4. All known jobs within one year must be put on the forecast and must be pinpointed by month. Please pay special attention to quarter limits and try to get all jobs at least within the correct quarter as most of our planning and forecasting are done on a quarterly basis.

5. Only those jobs which are more than five years away will be put in the 999 category.

6. All jobs over one year but not more than five years away will be denoted by the first two digits 99 and a third digit to specify the year. For example, a job expected to go in 1970 will be classified 990.

   Present categories would be as follows:
   990 - 1970
   991 - 1971
   992 - 1972
   993 - 1973
   994 - 1974
   999 - 1975 and beyond

7. All jobs which have issued a request for quotes must be on the forecast and must be pinpointed by month. Jobs which have requested budget estimates must be on the forecast.

8. Probability of capture columns (A, B, & C) must denote only our probability of receiving a job. Regardless of how far out a job may be, if we are likely to get it, put the dollar amount in the A column or as appropriate.

APPROVED _____

A column = 100-75% chance of our receiving job
B column = 75-50% chance of receiving job
C column = 50-0% chance of receiving job

9. All timing must be reflected in the date column only.

10. The D or future column will be used only when a job is further than five years away and has the classification 999.

11. Rapid transit jobs which have not been funded will not be forecasted within one year and will be classified in the appropriate category as explained in No. 6 above.

12. Rapid transit jobs whose specifications have not been written or are in the act of preparation will be dealt with as in No. 11 above.

13. Rapid transit jobs whose specs have been commented on must be on the forecast and must be pinpointed by month.

14. All information must be examined monthly and corrected for slippage and accuracy. This must be reflected in the probability and timing columns.

15. Headquarters will not add any jobs to the forecast. Any questionable jobs will be called to Regional Managers' attention by being placed in pencil on the IBM run when returned to the regional office for updating.

APPROVED_____

WABCO

SALES MANUAL

WESTINGHOUSE AIR BRAKE COMPANY
SIGNAL & COMMUNICATIONS DIVISION
Swissvale Post Office, Pittsburgh, Pa. 15218
An American-Standard Company

SUBJECT: Report Schedules & Responsibilities

Report & Description	Due	Responsibility
Booking Forecast - (Project, and Equipment Orders)		
#1 - Terminated, Lost Received		
#2 - Forecast By Business Area		
#5 - Forecast By Region, Salesman, & Customer		
Initial inputs	25th day	Field representatives
Edit inputs	26th day	Field Sales Hdgtrs.
Review revised forecast	1st working day	Market & Sales Mgrs.
To keypunch & Data Cntr.	2nd or 3rd working day	Field Sales Hdgtrs.
Updated tab run #5 to Sales Managers & Sales Offices. Report #2 to Marketing Managers.	4th working day	Field Sales Hdgtrs.
Bookings by Business Area	One day after books close	Inputs by Cust. Service to data processing.
Short-Range Booking Forecast -	5th working day	Field Sales Hdgtrs.
Statistical summary for 12 mos.		

APPROVED _____

WABCO

SALES MANUAL

WESTINGHOUSE AIR BRAKE COMPANY
SIGNAL & COMMUNICATIONS DIVISION
Swissvale Post Office, Pittsburgh, Pa. 15218
An American-Standard Company

Report & Description	Due	Responsibility
Booking Variance Report - Letter	5th working day	Manager - Marketing
Booking Value Report & report of orders $10,000 and over	Every Friday & end of month.	Customer Services
Large Order Booking Forecast	1st working day 6th working day	Inputs from: Field Sales Headquarters. (Bookings) Engineering (Schedules) Customer Service (Billings)
Bookings, Billings, Backlog	10th working day	Inputs from: Field Sales Headquarters. --(Booking Forecast) Prod. Cont. (Billings Forecast) Customer Service -- (Actual Bookings Billings & Backlog)
Booking Variance Report - Statistical	12th day of month	Field Sales Headquarters.
Lost Business Report	Must accompany updated booking forecast due on 25th day of month.	Field Sales Headquarters. w/review & comments by Marketing Managers.
Expense Budget - Marketing Dept.	Annually	Marketing Services
Expense Budget Performance Report - Detailed, Summary & Variance analysis	Approximately 15th of mo.	Marketing Services

APPROVED_____

WABCO

SALES MANUAL

WESTINGHOUSE AIR BRAKE COMPANY
SIGNAL & COMMUNICATIONS DIVISION
Swissvale Post Office, Pittsburgh, Pa. 15218

DATE:3/27/70
ISSUANCE:2.71
PAGE:1 of 1

SUBJECT: Disclosure of Innovative Ideas in Sales Proposals

All personnel who may have an opportunity to either assist in the writing of a sales proposal or who may be in a position to discuss its content are cautioned about making possible indiscriminate references as to what we, WABCO, propose to offer in those instances where we are required to agree to grant the prospect or customer a royalty free license to produce any developments disclosed by our bid in the event that our conceptual approach was adopted but we were not the successful bidder. There may be "in house" many parallel endeavors which would be logically applicable to the problems to be solved for the subject project.

Therefore, you are cautioned, in general, not to present technological contributions evolved by the Division as being "uniquely" created for this proposed project. To do so would be a giveaway of our "birthright" to concepts that have taken physical form and cost us engineering dollars, that we could never recoup if we should not prevail as the successful bidder.

Since our Division patent policy is to pursue every commercially significant idea that attains the dignity of being patentable, we encourage your close scrutiny of all physical documentation that is proposed as "innovative", to ensure that only those ideas which are truly "conceived" and make "viable" as a result of our endeavor with a specific project be designated such, and therefore freely useable by our competitors, should we not prevail as the successful bidder.

APPROVED

SUBJECT: Correspondence Handling Procedures between Sales Office & Headquarters

CORRESPONDENCE - SALES OFFICE TO HEADQUARTERS

GENERAL RULES

1. Original is always the action copy. The addressee is soley responsible for initiating any required action and for replying to the initiator of the correspondence. If the addressee feels that he is not the logical person to be addressed, he is still responsible for insuring that (1) the correspondence gets prompt and correct referral and (2) that the initiator is informed of the referral. The person to whom the correspondence is officially referred is then responsible for proper action, response, and reply.

2. Whenever the addressee is not a Sales Manager, a copy is to be addressed to the appropriate Sales Manager.

3. Indicate on all copies the initials or names of all persons receiving copies.

4. "Information Only" copies may be addressed to individuals in Marketing and Engineering only when considered desirable. Do not abuse this privilege by excessive use.

5. All correspondence originating from the Sales Offices should include the G. O. and sub number or the Marketing Control Number when such numbers have already been assigned.

6. All correspondence originating with a customer, and being relayed through a sales office, should have the same identifying information placed upon it by the Sales Office.

7. "Personal & Confidential" correspondence to be in separate sealed envelopes and enclosed in the large mailing envelopes. Sender's initials should be shown on outside of envelope. All other correspondence-omit separate envelopes and mail in large envelope.

8. Outside mailing envelopes are to be addressed:

   (Eastern or Western)Sales Manager
   WABCO - Signal & Communications Division
   Pittsburgh, Pa. 15218

CORRESPONDENCE - HEADQUARTERS TO SALES OFFICES

GENERAL RULES

1. Address correspondence to " (city) Sales Office, (city, state)" not to individuals.

2. For all correspondence to Sales Offices, either a copy is to be sent or the file routed to the appropriate Sales Manager.

3. For all correspondence on the following subjects, either a copy is to be sent or the file routed to the respective market manager.

   Prospective Orders
   Market Intelligence and Customer Relations
   Competitive Intelligence
   Project Orders already received
   Plant Visitors

4. Telex operator to forward to the appropriate Sales Manager the third copy of all Telex messages sent to Sales Offices.

5. Telex operator to forward to the appropriate Sales Manager the third copy of all Telex messages received from Sales Offices (except when message is addressed to him, then send all three copies).

6. When applicable, all correspondence should include GO and Sub Number or the Marketing Control Numbers when such numbers have been assigned.

7. Sales Offices are as follows:

Sales Office	Address
Philadelphia	Two Penn Center Plaza Room 1630 Philadelphia, Pa. 19102 215-568-8032
Atlanta	2 Peachtree Street Room 1815 Atlanta, Georgia 30303 404-577-2896
New York	3400 Empire State Bldg. 350 Fifth Avenue New York, N.Y. 10001 212-244-2590
Pittsburgh	Swissvale Pittsburgh, Pa. 15218 412-242-5000
Chicago	80 E. Jackson Blvd. Chicago, Illinois 60604 312-427-0800
St. Paul	402 McColl Building St. Paul, Minn. 55101 612-222-7562

Sales Office	Address
San Francisco	1850 Wells Fargo Bldg. 44 Montgomery Street San Francisco, Calif. 94104 415-392-0333
Montreal	1155 DORCHESTER BLVD. WE. ~~Canadian Imperial Bank of Commerce Bldg.~~ ROOM 3116, ~~Montreal 2, Que., Canada~~ MONTREAL 102, 514-866-3677 QUE CANA.

TELEPHONE CALLS - SALES OFFICE TO HEADQUARTERS

GENERAL RULES

1. Issuance 2.3 shows names of persons responsible for various market and product areas. Calls may also be placed to an individual whom you know is handling a specific subject or assignment.

2. Do not request, by telephone, engineering time to be spent on a specific problem (other than answering a brief telephone call) without requesting engineering support through the respective market manager.

3. Do not call several persons concerning the same subject unless you advise each one that you have talked with others.

WABCO

SALES MANUAL

WESTINGHOUSE AIR BRAKE COMPANY
SIGNAL & COMMUNICATIONS DIVISION
Swissvale Post Office, Pittsburgh, Pa. 15218

DATE: 1/21/70
ISSUANCE: 2.81
PAGE: 1 of 1

SUBJECT: REQUESTS FOR PRINTS OF ENGINEERING DRAWINGS

When requesting prints of engineering drawings, please use form US&S 1163F (available upon request from the stationery section).

Except for emergencies, do not request prints in ordinary correspondence or by telephone or telegram.

Manufacturing drawings are not to be furnished to customers or to regional offices.

Please note that the above form is a "Reproduction & Filing Order" addressed directly to the Reproduction Section with a removable portion that is used for sending the prints to you.

APPROVED

WABCO

SALES MANUAL

WESTINGHOUSE AIR BRAKE COMPANY
SIGNAL & COMMUNICATIONS DIVISION
Swissvale Post Office, Pittsburgh, Pa. 15218
An American-Standard Company

DATE: 8/27/70
ISSUANCE: 2.82
PAGE: 1 of 2

Also for all Swissvale & Batesburg Managers.

SUBJECT: Business Cards - Procedure for Ordering

Effective immediately, we have established a new procedure to eliminate delays experienced previously in obtaining business cards.

A blanket purchase order # P79766-24 has been issued to Bankers Lithographing Company (an American-Standard Company) of Pittsburgh to cover all business card purchases. The procedure you are to follow is:

1. Prepare a business card sample, using one of your own previous cards or someone elses marking it to show revisions required in name, title, address, phone number, etc. Be sure the changes are legible and that all information including zip code are shown exactly as you want it printed.

2. Send sample card with a letter from the Department or Regional Manager (with title indicated thereon) mentioning the above purchase order number direct to:

   Mr. Bill Aiken
   Bankers Lithographing Company
   P.O. Box 918
   Pittsburgh, Pa. 15230

   All orders must be authorized by a person holding a manager's title or above.

APPROVED

3. Letter should specify if quick service letter press cards are required in which case these can be supplied in approximately one week. Normal delivery time for repeat orders (no changes) of regular steel engraved cards is about three weeks. If changes are necessary, allow about six weeks. Anticipate your requirements and receive your cards when required.

4. A copy of your letter is to be sent to the Purchasing Department, Swissvale, referencing this purchase order number.

Upon receipt of an order for cards, they will be processed immediately and shipped directly to the person whose name appears on the cards. The number normally supplied is 250, however, if smaller or larger quantities are desired, so specify. The costs of cards ordered will be charged against your office account at the following rates:

100	@	$4.00	500	@	$12.50
250	@	$6.25	1000	@	$23.00

plus steel die charges of $3.50 per line for a new card or a name change. Charges for company, division name or address will be paid by headquarters.

APPROVED_____

WABCO

SALES MANUAL

WESTINGHOUSE AIR BRAKE COMPANY
SIGNAL & COMMUNICATIONS DIVISION
Swissvale Post Office, Pittsburgh, Pa. 15218
An American-Standard Company

SUBJECT: Index - SALES STRATEGY Section

Issuance	Subject	Date
3.2	Preparation Of Customer Profiles	8/15/69
3.33	Supervisory Control System Capabilities Typical Sales Letter	7/20/70

APPROVED _____

WABCO

SALES MANUAL

WESTINGHOUSE AIR BRAKE COMPANY
SIGNAL & COMMUNICATIONS DIVISION
Swissvale Post Office, Pittsburgh, Pa. 15218

DATE: 5/24/71
ISSUANCE: 3.1
PAGE: 1 of 1
Replaces Issuance
8/27/70

SUBJECT: Spare Parts Ordering

It is the responsibility of the Field Sales Personnel for the timely ordering of spare parts for system orders. Sales representatives must impress upon their customers the importance of placing spare part orders at the same time a project order is placed, to allow delivery to take place with the main body of the order.

Both the customer and WABCO benefit in that we will realize a reduction of shop setup cost. Also, the customer will have adequate equipment to support his installation at the time of final checkout, thereby eliminating unnecessary delays.

Market Managers are responsible for including recommended spare part lists with every estimate. In the event new products are involved, Marketing and Engineering must develop the minimum recommended spare parts list and make these available to Field Sales as soon as possible.

Customer Services will arrange to place all spare parts orders on a Sub of the original system G.O.

APPROVED _____

~~PLR~~
A.G.

WABCO

SALES MANUAL

WESTINGHOUSE AIR BRAKE COMPANY
SIGNAL & COMMUNICATIONS DIVISION
Swissvale Post Office, Pittsburgh, Pa. 15218
An American-Standard Company

DATE: 10-23-70
ISSUANCE: 3.11

SUBJECT: Samples for Product Information

From time-to-time, we have requirements to provide prototype or sample products for use in introducing products to our customers. There are a number of ways in which such samples can be obtained.

In the case of a product which is under a Development Program, samples are to be included in the development cost. At the time the AFPD is prepared, each Marketing Manager, having responsibility for the end product, will be consulted for his requirements to launch a product in the market. The cost of such samples will then be included in the AFPD. Should an order be obtained for these samples, headquarters marketing should be so advised. The value will then be credited back to the Development Program.

The second approach and the next most desirable for use where a Development Program has already been completed is the Consignment G. O. A memo should be written by the responsible marketing manager to Customer Services requesting the material on a Consignment G. O. In this case, an order must eventually be obtained from the customer for this material or the material returned in good condition for stock. A reasonable time limit must be placed on such consignment orders depending upon the product and the needs of the customer for its evaluation.

The third mechanism by which samples can be obtained is the No Billing G. O. for use as salesman samples. This should only be used in special cases and with discretion when no order can be obtained and/or where it may be necessary to test a product to destruction, and the material cannot be returned for subsequent use. The material should be ordered by memo, as in consignment orders above, except it should be identified as a No Billing G. O. for use as a salesman's sample.

APPROVED _____

WABCO

SALES MANUAL

WESTINGHOUSE AIR BRAKE COMPANY
SIGNAL & COMMUNICATIONS DIVISION
Swissvale Post Office, Pittsburgh, Pa. 15218

SUBJECT: Preparation of Customer Profiles

Each salesman must keep a customer profile for each of his accounts. These profiles should be updated frequently and copies sent to headquarters. The following information should be on each profile in the order indicated to facilitate retrieval of information.

1. Customer Name and Number.

2. Customer Address and Telephone Number.

3. Customer Contacts.
   A. Principal contacts including titles.
   B. Planned frequency of calls.
   C. Actual call dates.

4. Sales Potential.

5. Saleable Products.

6. Competitive Product Equivalents.

7. Competitors' Relationships With Customer.

8. Pertinent Remarks.

APPROVED _____

WABCO

SALES MANUAL

WESTINGHOUSE AIR BRAKE COMPANY
SIGNAL & COMMUNICATIONS DIVISION
Swissvale Post Office, Pittsburgh, Pa. 15218

SUBJECT: Supervisory Control System Capabilities
Typical Sales Letter

Below is a typical sales letter, which can be used as is or modified to suit a particular selling situation, to briefly describe our past accomplishments and capabilities to prospective customers with whom we are not well known:

"WABCO is most anxious to work with you in developing specifications for your supervisory control system. We are experienced in manufacturing and supplying solid state control systems of all sizes and with any degree of sophistication you require.

WABCO is among the 300 largest manufacturing companies in the nation and supplies systems and equipment for Pipeline, Aviation, Construction, Defense and Aerospace, General Industry, Petroleum, Mining, Railroad and Rapid Transit Industries.

The Signal & Communications Division (formerly Union Switch & Signal) has, since 1881, been engaged in producing control and signal systems for railroads and rapid transit systems. We have been producing pipeline control systems since 1954 and have originated many of the concepts now accepted in pipeline control.

Since June 1968, WABCO has been an American-Standard Company.

We have pioneered the push-button control of gas, crude, products and coal slurry pipelines. We have systems in the United States, Canada, Mexico, Saudi Arabia and Pakistan.

Our division's main plant is located in Swissvale, a suburb of Pittsburgh, Pennsylvania, and contains 1,200,000 square feet of space. The division employs some 2,100 people, of which about 220 are engineers.

The Union Switch & Signal Construction Company is capable of installing any of our equipment or systems as well as electrical facilities & instrumentation.

APPROVED _____

Today, the emphasis is on solid state pipeline control systems. WABCO installed a solid state pipeline control system in 1962, and continues to provide standard, economical, Total Pipeline Control (TPC) Systems of proven reliability, providing maintenance-free operation.

WABCO supervisory control systems are designed and manufactured in our plant at Swissvale, Pennsylvania, except for the general purpose digital computers, which are purchased. We have a complete section of our engineering department devoted to computer applications, and do the programming "in house".

Listed below are some of our solid state systems which are in service, and we will be glad to furnish further information on any of them:

OWNER AND LOCATION	NO. STATIONS PRESENT	NO. STATIONS FUTURE	YEAR INSTALLED
Columbia Gas of Ohio Columbus, Ohio	20	63	1965
Phillips Pipeline Co. Bartlesville, Okla.	8	63	1964
Mid-America Pipeline System Tulsa, Okla.	6	63	1968/69
Diamond Shamrock Corporation Mont Belvieu, Texas	4	63	1970
Long Island Railroad New York, N.Y.	7	63	1964
New York City Transit Authority New York, New York	10	63	1963
Delaware River Port Authority Camden, N.Jersey	10	63	1967
Missouri Pacific R.R. Co. Fort Worth, Texas	21	63	1967
Union Railroad Pittsburgh, Pa.	36	63	1964
Canadian National R.R. Toronto, Canada	68		1964

APPROVED _____

OWNER AND LOCATION	NO. STATIONS PRESENT	NO. STATIONS FUTURE	YEAR INSTALLED
Canadian National R.R. Camloop, Alberta	18	168	1970
Pittsburgh & Lake Erie Pittsburgh, Pa.	30	63	1967
Penn Central R.R. Ft. Wayne, Ind.	12	63	1969
Canadian National R.R. London, Ont.	8	100	1970

Computer Dispatch & Inventory Control Systems

Southern Pacific Company, Eugene, Oregon	1967
Norfolk & Western Railway, Bellevue, Ohio	1968
Burlington Northern Railroad, Kansas City, Mo.	1969/70
Santa Fe Railway, Kansas City, Mo.	1969/70
Canadian Pacific Railway, Alyth, Calgary	1970/71
Norfolk & Western Railway, Roanoke, Va.	1970/71
Canadian National, Calder, Alta.	
Missouri Pacific R.R., Ft. Worth, Texas	1970/71

In addition, we have in service some 120 installations of electro-mechanical type supervisory control systems on pipelines consisting of 600 stations.

WABCO has and will continue to support the pipeline industry with reliable, high quality supervisory control systems which require practically no maintenance. WABCO is the only major supplier of pipeline supervisory systems that has been in the business from its beginning. You will be glad you selected a WABCO system because it is the best system available."

APPROVED _____

WABCO

SALES MANUAL

WESTINGHOUSE AIR BRAKE COMPANY
SIGNAL & COMMUNICATIONS DIVISION
Swissvale Post Office, Pittsburgh, Pa. 15218
An American-Standard Company

WABCO

MONORAIL AND S.&C. DIVISIONS

SALES REPRESENTATION

The purpose of this issuance is to list responsibilities and guidelines for S.&C. Division sale of systems, products, and services of the Monorail Division. S.&C. Division has signed an agreement to develop and sustain a satisfactory sales volume of Monorail Division products.

Products

Monorail Division customers are defined as those who own or operate or desirous of owning or operating a small transit system which could be manufactured by, or are competitive with, the products of the Monorail Division. S.&C. Division represents Monorail Division in the sale of the following products:

1. Monorail systems
2. Sky Towers
3. Monorail signal & control systems
4. Extensions & additions to products under 1,2, & 3
5. Repairs, replacement parts to the products under 1,2, & 3

APPROVED _____

The S. &C. Division product lines are included for small transit systems for signaling, control and communications systems where applicable. Monorail Division will provide marketing direction for these products when applied to the Monorail Division product line.

Territories

S. &C. Division Representatives will be assigned sales coverage based upon the geographic territory most closely aligned with their current responsibilities in the Railroad and Transit fields. The territories assigned are as listed on Appendix A attached covering United States & Canada.

Sales Procedure

S. &C. Division Representatives will work directly under the leadership of their Sales Manager, but will communicate and receive direction from the Sales Manager of the Monorail Division as may be required in day-to-day contacts. All communications between the two Divisions are to be documented with copies given on a need-to-know basis but as a minimum to the immediate supervisor. Sales contact

reporting shall include a call report together with a detailed expense report submitted with monthly expense accounts.

Sales Representatives are expected to generate and maintain a contact list showing potential sales and promotional areas for Monorail Division products. This listing would include public authorities, universities, recreation centers, and consultants and others, all of whom may be interested in the application of small transit systems.

Communications Channels

Attached Communications Flow diagram designates usual communications flow between the customer, Representative, and Monorail Division. Please note that sales representatives will communicate directly with Monorail Division Sales Manager, Pete Barnes for normal contacts but will report to the Sales Manager for sales planning and organized system sale efforts.

We urge you to do your utmost to cooperate with the Monorail Division to our mutual benefit enabling both Divisions to meet their profit goals. You are expected to police terms and conditions for sale of the products and to deal honestly and straightforwardly with

Monorail Division personnel so as to avoid misunderstandings which might arise as we jointly pursue business opportunities for small transit systems.

APPROVED _____

APPENDIX A

WABCO

MONORAIL AND S.&C. DIVISIONS

SALES REPRESENTATION

Sales Territories

United States & Canada

CADMAN

Oregon
Nevada
California
Arizona
Utah

CULLUM

Minnesota
N. Dakota
S. Dakota
Nebraska
Colorado
Wyoming
Idaho
Montana
Washington

CLARK

Florida
Alabama
Georgia
S. Carolina
Tennessee
Kentucky
N. Carolina

JOHNSON

Missouri
Kansas

SHEPHERD

Wisconsin
Illinois

GOFF

Iowa
Indiana

O'ROURKE

Canada

GAUS

Michigan
Ohio
W. Virginia
Western Penna.
(west of Carlisle)

GUDENRATH

Virginia
Maryland
Delaware

DUBAS

New York State
Maine
New Hampshire
Vermont
Massachusetts
Connecticut
Rhode Island

MALLOY

New York Metropolitan
Area

ERIKSON

New Jersey (north of
Atlantic City)
Eastern Penna.
(east of Carlisle)

APPROVED_____

SALES REPRESENTATION

MONORAIL DIV. - S&C DIV.

Communications Flow Diagram

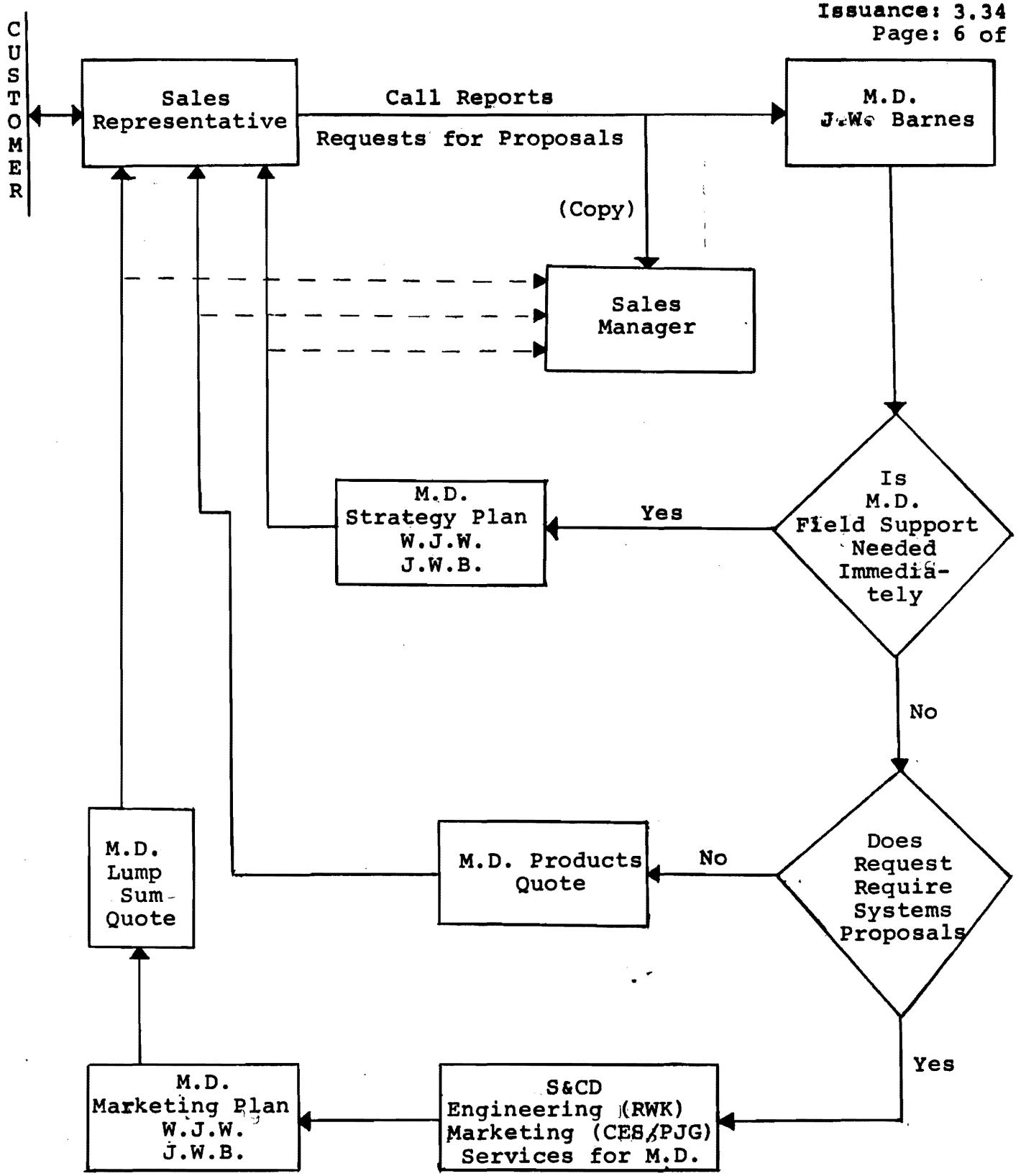

April 5, 1971

WABCO

SALES MANUAL

WESTINGHOUSE AIR BRAKE COMPANY
SIGNAL & COMMUNICATIONS DIVISION
Swissvale Post Office, Pittsburgh, Pa. 15218
An American-Standard Company

SUBJECT: Index - PRICING Section

Issuance	Subject	Date
4.1	Warranty Clauses In Equipment Leases	11/24/69
4.2	Procedure For Returning Material For Credit	10/8/69

APPROVED

WABCO

SALES MANUAL

WESTINGHOUSE AIR BRAKE COMPANY
SIGNAL & COMMUNICATIONS DIVISION
Swissvale Post Office, Pittsburgh, Pa. 15218

WARRANTY CLAUSES IN EQUIPMENT LEASES

In view of some recent adverse state court decisions concerning the warranty liability of companies which have granted equipment leases, it has been recommended that all such leases contain a statement in distinctive type that Lessor gives no warranty, express or implied, of MERCHANTABILITY or FITNESS FOR PURPOSE, and further disclaims any and all liability for consequential damages. Of course we will still include our normal warranty on whatever terms are currently negotiated.

The Signal & Communications Division Legal Department will be glad to respond on call to any inquiries on this matter and provide the necessary legal language to attain suitable protection.

APPROVED

WABCO

SALES MANUAL

WESTINGHOUSE AIR BRAKE COMPANY
SIGNAL & COMMUNICATIONS DIVISION
Swissvale Post Office, Pittsburgh, Pa. 15218

SUBJECT: Procedure for Returning Material for Credit

Authority to return material for credit must be obtained from Customer Service Department.

Cost to the customer of returning material for credit is 15% plus shipping charges.

Decision as to disposition of returned material is to be made by Customer Service Department; i.e., convert, disassemble, scrap or stock.

APPROVED_____

WABCO

SALES MANUAL

WESTINGHOUSE AIR BRAKE COMPANY
SIGNAL & COMMUNICATIONS DIVISION
Swissvale Post Office, Pittsburgh, Pa. 15218
An American-Standard Company

SUBJECT: Pricing Policy

This issuance establishes guidelines and responsibilities for pricing railway signal systems and equipment.

The development of a selling price at which we are willing and able to accept an order or a supplemental order is the responsibility of the appropriate Market Manager. Price to be established must be agreed upon with the appropriate Sales Manager as to its competitiveness in the market place both specifically to an individual customer and broadly toward market price trending.

The functional specification for equipment and systems design are the responsibility of the appropriate Market Manager who will act as the coordinator for Engineering, Manufacturing, and other responsibility centers in developing the best approach toward the specific market opportunity. This also means that responsibility for bidding or not bidding rests mainly with the appropriate Market Manager as approved by Marketing Department Manager.

Ground rules for quotations are as follows:

1. Quotations and proposals of $100,000 or over are to be reviewed by Marketing Department Manager who will arrange financial review with Controller before formalization and submittal to customer. This review will encompass cost analysis, selling strategies, and gross margin check. Marketing Department Manager will arrange for General Manager review when appropriate.

2. All proposals either firm or budgetary which give margin dollars less than that currently established of the total (pricing) cost (including SG&A, etc.) must be reviewed by Marketing Department Manager before any action is taken to release information that will reach our customers.

3. All proposals where costs appear questionable for any reason, or where our Company's ability to perform in fulfillment of the order is questioned for any reason, should be brought to the attention of Marketing Department Manager. This includes all proposals with significant development content, new or major engineering skills or other requirements generally outside of strategic plan. Such special commitments must have approval of Engineering and/or Manufacturing Department Manager before inclusion within cost estimate.

APPROVED _____

4. New equipment or products; special prices to OEM accounts; establishment of agency fees; and all other pricing that involves establishment of new agreements, introduction of new products, or new market entries must be approved by Marketing Department Manager.

Adequate time must be planned into all firm proposal and bidding routines to allow for advance scheduling for job review, where required, in accordance with above guidelines. Market Manager will be responsible for scheduling bid review of major systems at least one week prior to bid date. Sales Manager will have responsibility for originating monthly bid date review schedule commensurate with customer requirements.

A listing of all systems and equipment proposals showing the customer, business area, costs, and pricing should be generated by each Market Manager and sent to Marketing Department Manager under "Confidential" cover each quarter.

APPROVED_____

WABCO

SALES MANUAL

WESTINGHOUSE AIR BRAKE COMPANY
SIGNAL & COMMUNICATIONS DIVISION
Swissvale Post Office, Pittsburgh, Pa. 15218
An American-Standard Company

SUBJECT: Index - MARKET RESEARCH & PRODUCT PLANNING Section

Issuance	Subject	Date
5.1	Market Planning & Development General Province Guideline	8/18/70
5.2	Monthly Special Orders Booked Report	8/15/69
5.4	Quarterly DV Status Reports	8/15/69
5.5	New Product Suggestions Procedures	8/15/69

APPROVED _____

WABCO

SALES MANUAL

WESTINGHOUSE AIR BRAKE COMPANY
SIGNAL & COMMUNICATIONS DIVISION
Swissvale Post Office, Pittsburgh, Pa. 15218
An American-Standard Company

SUBJECT: MARKET PLANNING & DEVELOPMENT
GENERAL PROVINCE GUIDELINE

Market Planning and Development is responsible for market planning, market research, market development and overall product planning for the Division.

The market planning activities include determining what markets the Division should be in, doing the market research to identify new business opportunities, and measuring division and competitor's performance.

The section is responsible for investigating new products, determining their functional requirements, specifying major changes to existing products, securing the product line for discontinuance of marginal or unprofitable items and coordinating all product planning efforts with other departments. This includes the preparation of documentation to obtain funding for development programs and coordinating these activities with engineering and manufacturing. The section monitors development programs to assure that products meet the needs of the Division's markets and the results meet the objectives. It is responsible for recording, monitoring and maintaining authorization and documentation for all such programs. The activities include:

Analyzing present and future trends.

Performing market research which is beyond the scope or capability of a single market area.

Planning new product additions.

Delivering functional specifications.

Relating product to Division's marketing, engineering, and manufacturing capabilities.

Investigating and recommending products and companies for acquisition.

APPROVED _____

Conducting operation and transportation studies to develop new markets and support system sales.

Establishing development priorities.

Maintaining information files of industry statistics, competitor activity and product data.

Market Planning and Development provides planning beyond immediate or specific job orientated programs.

Its activities include participation in technical and industry groups necessary to develop and initially commercialize new products and systems.

APPROVED _____

WABCO

SALES MANUAL

WESTINGHOUSE AIR BRAKE COMPANY
SIGNAL & COMMUNICATIONS DIVISION
Swissvale Post Office, Pittsburgh, Pa. 15218

DATE: 5-6-71
ISSUANCE: 5.5
PAGE: 1 of 3
Replaces Issuance
Dated 8/15/69

Products/Systems
Procedure For Development Program

Development Programs begin with an idea or need which can be initiated in any one of several ways; (1) A requirement of a system order for something which is not available, an example is a piece of equipment for measuring coupling speed in classification yards which can feed a signal back into the computer to correct overspeed or under speed errors, (2) A new product using the latest technology to replace an older design, an example is the solid state axle generator to replace the older mechanical type, (3) An idea from the market for a product that broadens the line, an example is the solid state DC to DC converter used to replace the motor generator set previously used with cab signal equipment, etc.

These inputs may be generated in a number of ways; as part of a project specification, ideas from Engineering or Marketing, persons outside the company.

To insure that resources are efficiently employed, all idea inputs are subjected to a review procedure. This procedure is designed to move ideas from the conceptual stage to a finished product,system, or conclusion, as rapidly as possible and to quickly eliminate those which do not measure up to divisional goals and objectives.

Inputs may be classified on the basis of those involving sustained use of Research and Development Engineering resources or those which do not.

The remainder of this paper describes the procedure for handling inputs which require R&D engineering effort and are translated into development programs.

Development programs may be assigned to one of several categories:

a. DV - Pure product development programs resulting in a new or different product.

APPROVED _____

b. DGO - Product development portion of G. O. 's PROVIDED THAT:

1. Product has application to future orders.

2. Return on investment meets Divisional guidelines.

3. Product Committee authorizes program.

(In the event that the conditions of 1 and 2 cannot be met, the G. O. must sustain the full cost of development.)

c. Advance Development - Programs which are investigative in nature and which may or may not result in a product development.

d. EIP-DV - Engineering development programs aimed at product cost reductions.

After the receipt of an idea there is an initial review by Marketing, Engineering, or both, which is designed to pass those which are in the interests of the Division and will meet short or long range business goals and objectives.

All ideas which pass initial screening are then advanced by the preparation of an Engineering Abstract. The abstract (EA - sample attached) contains a brief description of the work to be performed, expected results, approximate costs and if product related will contain a rough estimate of product inventory cost level.

The Engineering Abstract is passed to the Marketing Department where a Marketing Abstract is prepared.

The Marketing Abstract (MA - sample attached) will contain a brief statement of need if recognized or a statement against if need is not apparent. Preparation of the Marketing Abstract may require preliminary market research effort especially for areas not familiar to WABCO. The abstract should contain a rough estimate as to 5 year market volume, and a selling price bogey if an identified product is involved. If a competitive product is involved, the price of the competing unit should also be noted. Product specifications are to be included if known.

The Engineering and Marketing Abstracts are then presented to the Product Committee. This committee is made up of the General Manager, the heads of Engineering, Manufacturing, Marketing, and Finance Department as well as the Manager of Research and Development, and Manager Manufacturing Engineering. Each subject is reviewed and a "go-no-go" decision is made on the development. If the decision is positive, a priority is established and authorization given for the expenditure of development funds on an interim basis up to $10,000 or 30% of the total cost, whichever is less. An Engineering Proposal (EP - sample attached) is then prepared which provides more detail on expected costs and contains specifications for the finished product or system. Upon receipt of the Engineering Proposal, Marketing prepares the final Authorization For Product Development (A. F. P. D. - sample attached). This form requires the signatures of Department Heads and depending upon the estimated costs, may require approval of group and corporate management. The limits for each level of authorization are:

Up to $ 25,000	Market Managers (terminals, mainline, communications, etc.) plus Manager, Marketing
- $ 25,000 to $150,000	As above plus other Department Heads and the General Manager
- $150,000 to $300,000	As above plus Group Vice President
Above $300,000	As above plus American Standard Corporation Management

During the course of a development, Engineering and Marketing periodically review progress. A more formal design review is held at the time an engineering model is available. At this point, agreement is reached between Marketing, Engineering and Manufacturing or changes may then be made before prototypes are provided.

A monthly meeting of the Product Committee also provides a vehicle for monitoring progress and maintaining communications between groups to alleviate major conflicts in program schedules.

A flow diagram of the complete procedure is shown in attached Figure 1.

Functional responsibility for program administration is shown in attached Figure 2.

APPROVED _____

PRODUCT DEVELOPMENT

Figure 1

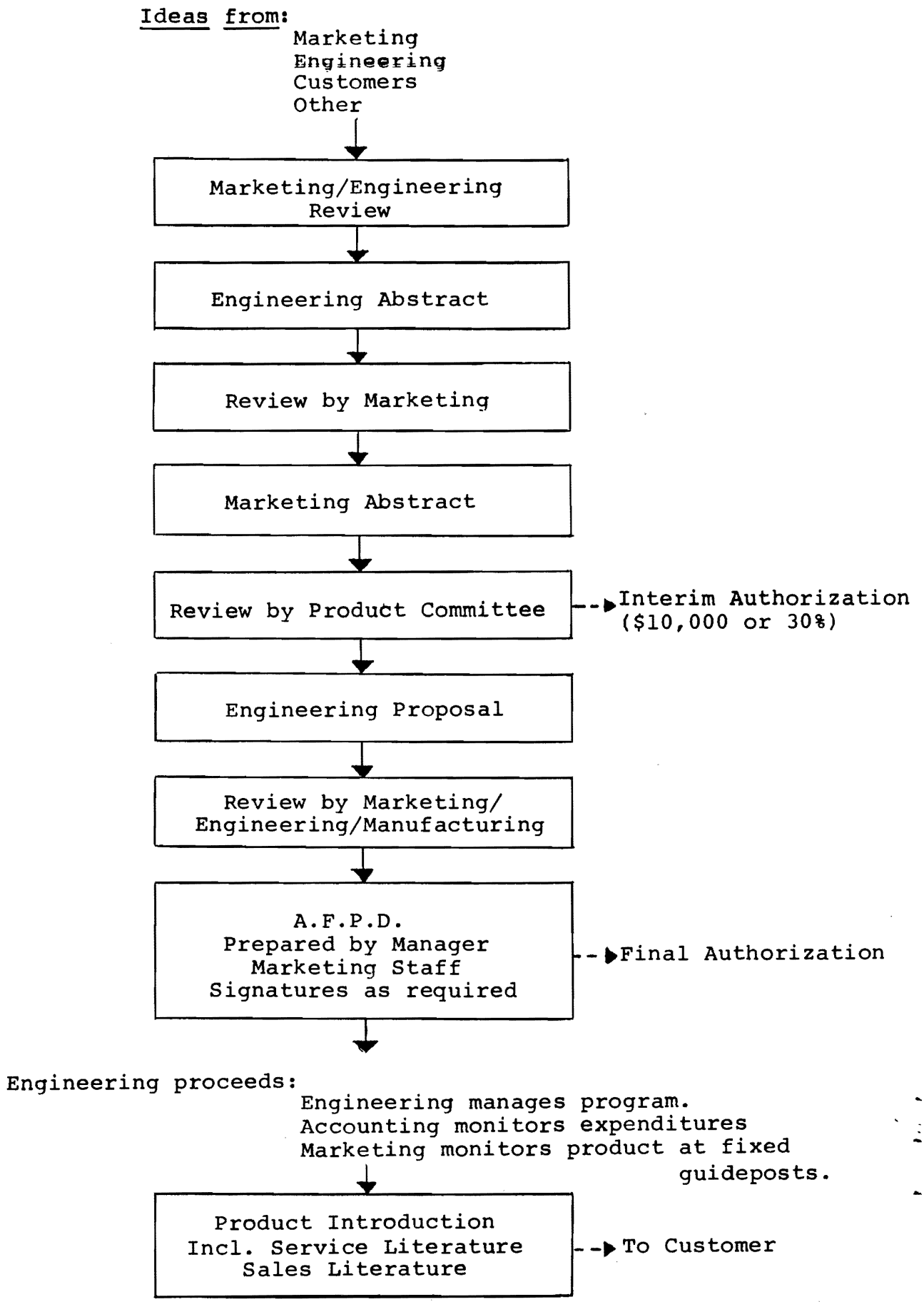

PRODUCT DEVELOPMENT

Figure 2

R & D ENGINEERING

Product Verification Section

- Reviews Inputs
- Coordinates with Manager Marketing - Staff
- Establishes Program Management and Procedure:
  Administration/Funding/ Scheduling/Reporting
- Periodically Reviews Programs with Marketing

R & D Engineering Sections

- Prepares Abstracts/Proposals
- Performs Development Tasks
- Reports Progress to Program Manager

MARKETING

Manager Marketing - Staff

- Reviews Inputs
- Coordinates Marketing Sections/Product Managers with Product Verification Section
- Marketing Administration/Procedure for Programs and Planning
- Prepares AFPD Document
- Periodically Reviews Programs with Engineering

Marketing Sections

- Reviews Inputs
- Prepares Abstracts
- Establishes Marketing Plan
- Reviews Progress with Manager Marketing - Staff

WABCO

WESTINGHOUSE AIR BRAKE COMPANY
SIGNAL & COMMUNICATIONS DIVISION
Swissvale Post Office, Pittsburgh, Pa 15218

ENGINEERING
PROPOSAL

ISSUANCE NO. EP-
DATE:
REVISION NO.

CONFIDENTIAL

TITLE: Motion Detector

SUMMARY:

At the present time there is one competitor who has a motion detector on the market. This product is considered non-vital because circuit component failures can prevent it from recognizing an approaching train.

The equipment being proposed will incorporate vital check features to verify that the electronic circuits are intact. It will detect a train either approaching a crossing or within an absolute zone (island circuit) and will be compatible with AFO II.

A patent disclosure has been prepared on the self-check features and there is a possibility that coverage can be obtained.

REFERENCES: R & D Abstract 21

THIS DOCUMENT AND ITS CONTENTS ARE THE PROPERTY OF WESTINGHOUSE AIR BRAKE COMPANY. FURNISHED TO YOU ON THE FOLLOWING CONDITIONS: NO RIGHT OR LICENSE IN RESPECT OF THIS DOCUMENT OR ITS CONTENTS IS GIVEN OR WAIVED IN SUPPLYING THE DOCUMENT TO YOU. THIS DOCUMENT OR ITS CONTENTS ARE NOT TO BE USED OR TREATED IN ANY MANNER INCONSISTENT WITH THE RIGHTS OF WESTINGHOUSE AIR BRAKE COMPANY OR TO ITS DETRIMENT AND ARE NOT TO BE COPIED, REPRODUCED, DISCLOSED TO OTHERS OR DISPOSED OF EXCEPT WITH ITS PRIOR WRITTEN CONSENT PRIOR TO BEING PLACED IN REGULAR SERVICE, THE OPERATION OF ANY CIRCUITS AND EQUIPMENT PRESENTED HEREIN MUST BE CHECKED BY CIRCUIT SELECTION (BREAKDOWN) AND SERVICE (OPERATION) TESTS OF THE COMPLETE SYSTEM OR SECTION OF SUCH A SYSTEM INTO WHICH THEY ARE CONNECTED

APPROVED _____

APPROVED _____

WABCO

WESTINGHOUSE AIR BRAKE COMPANY
SIGNAL & COMMUNICATIONS DIVISION
Swissvale Post Office, Pittsburgh, Pa. 15218

ENGINEERING ABSTRACT

ISSUANCE NO. EA-
DATE:
CONFIDENTIAL

TITLE: Motion Detection (Highway Crossing Protection)

BACKGROUND AND SCOPE:

In areas where highway traffic is heavy, stopping traffic when a train is not blocking a crossing results in delays to motorists as well as traffic jams. Delays due to local switching are also annoying to motorists.

One competitor has sole equipment which measures the speed of the train, then operates the warning devices with a near constant delay between fast or slow trains (the predictor).

The Marketing opinion is that motion detection equipment would satisfy most of our needs. There is activity by D. O. T. in this area and the probability of regulatory laws.

In order to satisfy a product need for most of this market, we propose developing motion detection equipment which would test the equipment before occupancy or during the time a train is stopped in detection range. A patent disclosure has been made on this principle. This should give us a significant technical advantage over the Harmon Motion Detector which is checked up to the point of train detection only.

The equipment would be compatible with our new AFO equipment and would work in frequencies below the lowest used on AFO II. The equipment is expected to cost about 25% more than competitive equipment and will require sales effort based on its "vital circuit" advantages.

THIS DOCUMENT AND ITS CONTENTS ARE THE PROPERTY OF WESTINGHOUSE AIR BRAKE COMPANY, FURNISHED TO YOU ON THE FOLLOWING CONDITIONS: NO RIGHT OR LICENSE IN RESPECT OF THIS DOCUMENT OR ITS CONTENTS IS GIVEN OR WAIVED IN SUPPLYING THE DOCUMENT TO YOU. THIS DOCUMENT OR ITS CONTENTS ARE NOT TO BE USED OR TREATED IN ANY MANNER INCONSISTENT WITH THE RIGHTS OF WESTINGHOUSE AIR BRAKE COMPANY OR TO ITS DETRIMENT AND ARE NOT TO BE COPIED, REPRODUCED, DISCLOSED TO OTHERS OR DISPOSED OF EXCEPT WITH ITS PRIOR WRITTEN CONSENT. PRIOR TO BEING PLACED IN REGULAR SERVICE, THE OPERATION OF ANY CIRCUITS AND EQUIPMENT PRESENTED HEREIN MUST BE CHECKED BY CIRCUIT SELECTION (BREAKDOWN) AND SERVICE (OPERATION) TESTS OF THE COMPLETE SYSTEM OR SECTION OF SUCH A SYSTEM INTO WHICH THEY ARE CONNECTED.

MANUFACTURING COST–
L–$_____ O–$_____ M–$_____

ENGINEERING DIRECT LABOR: $_____ K TO $_____ K
NOMINAL DEVELOPMENT TIME–11 MONTHS

PREPARED BY _____

APPROVED _____

WABCO

WESTINGHOUSE AIR BRAKE COMPANY
SIGNAL & COMMUNICATIONS DIVISION
Swissvale Post Office Pittsburgh Pa 15218

MARKETING
ABSTRACT

ISSUANCE NO. MA–
DATE:
CONFIDENTIAL

TITLE Motion Detection (Highway Crossing Protection)

BACKGROUND AND SCOPE

Harmon Electronics has introduced a motion detector in this market area. The Harmon solution has received acceptance in the Industry and to date has performed satisfactorily at all known locations. The market survey indicates a market of approximately 400 units for 1970. However, Harmon's frequency assignment is not compatible with WABCO's AFO II frequency selection, therefore, it is necessary to develop and market a WABCO motion detector to protect our AFO II sales.

It is the marketing opinion that the WABCO unit should have features not contained in the Harmon unit. It has been suggested this feature should be more vitality in the form of a self check feature with a standing shunt.

R&D Abstract No. 21 contains the above characteristics. We, therefore, strongly recommend proceeding with this development.

THIS DOCUMENT AND ITS CONTENTS ARE THE PROPERTY OF WESTINGHOUSE AIR BRAKE COMPANY FURNISHED TO YOU ON THE FOLLOWING CONDITIONS NO RIGHT OR LICENSE IN RESPECT OF THIS DOCUMENT OR ITS CONTENTS IS GIVEN OR WAIVED IN SUPPLYING THE DOCUMENT TO YOU THIS DOCUMENT OR ITS CONTENTS ARE NOT TO BE USED OR TREATED IN ANY MANNER INCONSISTENT WITH THE RIGHTS OF WESTINGHOUSE AIR BRAKE COMPANY OR TO ITS DETRIMENT AND ARE NOT TO BE COPIED REPRODUCED, DISCLOSED TO OTHERS OR DISPOSED OF EXCEPT WITH ITS PRIOR WRITTEN CONSENT PRIOR TO BEING PLACED IN REGULAR SERVICE THE OPERATION OF ANY CIRCUITS AND EQUIPMENT PRESENTED HEREIN MUST BE CHECKED BY CIRCUIT SELECTION (BREAKDOWN) AND SERVICE (OPERATION) TESTS OF THE COMPLETE SYSTEM OR SECTION OF SUCH A SYSTEM INTO WHICH THEY ARE CONNECTED

PREPARED BY _____

APPROVED _____

MOTION DETECTOR

Background

In control of highway crossing signals where conventional approach circuits are employed, there can be unnecessary excessive delays to motorists caused by trains occupying the approach zone during switching moves or station stops.

One competitor sells equipment which measures the speed of the train, then operates the warning devices with a near constant delay for either fast or slow trains (the predictor). An alternate approach is to detect motion of the train only.

The Marketing opinion is that motion detection equipment can fill the majority of the market requirements and is more appealing because of its lower cost compared to a predictor.

Abstract

At the present time there is one competitor who has a motion detector on the market. This product is considered non-vital because circuit component failures can prevent it from recognizing an approaching train.

The equipment being proposed will incorporate vital check features to verify that the electronic circuits are intact. It will detect a train either approaching a crossing or within an absolute zone (island circuit) and will be compatible with AFO II.

A patent disclosure has been prepared on the self-check features and there is a possibility that coverage can be obtained.

Projected Product Cost

	L	O	M	T
Electronics				
* Wired Package	____	____	____	____
Total				

* For Sheet Metal Case.
See package objectives for alternate approach.

Scope

The scope of this program will include design of the hardware including the package, field test of a lab model, temperature testing, making standard drawings, shop specifications, and a rough draft manual. Six sets of electronic boards will also be made to check our frequencies.

Excluded from the scope is the system application logic which is normally operated over contacts of the approach circuit relays.

Development Expense

Research & Development

Direct Labor	$
Expense	$
Total	$

Cost of manufacturing engineering, application engineering, and printing of manuals is excluded.

Estimated Schedule (based on current priorities)

	Date
Preliminary Design Review	12/69
Drawings Complete	4/70
Program Complete	6/70

Objectives

1. System - The unit will detect trains either approaching a crossing above a pre-set minimum speed (about 5 mph) or trains within an absolute minimum zone (island circuit). Detection range is 1500-2500 ft. at 3 ohms ballast. Operating frequencies in the range of 200 to 600 Hz will be chosen in order to obtain longer detection range over the competitors. The equipment will be compatible and operate in conjunction with AFO II. Range of the minimum zone (island circuit) is 100 to 400 ft. The motion detector will operate a 400 ohm PN-150 external relay which will be deenergized when a train is

moving toward the crossing or in the minimum zone and energized if a train is stopped or receding from the crossing. System logic will be considered as part of the case wiring and no logic is included within the motion detector.

2. Technical - Operating voltage - 8.8 - 16.2VDC
Output - 6.5 volts into 400 ohms
Operating temperature range - -40 to +71°C
Shunting sensitivity - .06 ohm
Reverse battery and surge protection built in
AAR Rules - Parts 176, 274, and 275
Number of operating frequencies - 6

3. Vitality - Proposed design incorporates self-checking of the electronic circuits but not of the track approach zone. With respect to track conditions, the unit is considered non-vital and will require a wrap-around approach circuit with external logic to insure vital operation.

The self-checking of the electronic circuitry offers some competitive advantage over Harmons which is non-vital.

4. Overlaying - The design will overlay as many track circuits as can be economically justified in the following priority:

a. non-coded DC
b. coded DC
c. non-coded AC
d. coded AC
e. type C

5. Package - The electronic circuitry will be on printed circuit cards enclosed in a sheet steel enclosure approximately 6" high x 12" wide x 8-7/8" deep. It will be designed for rack mounting to be compatible with PN-150 modular dimension. Provision will also be made for wall and shelf mounting. Ten AAR terminals will be provided in the front for field wiring. The printed circuit cards will plug into the sheet metal case which is permanently mounted. Plug-in features are not included in the case. As an alternate approach, two unimodules bolted together without plug-in features, 10-5/8" deep x 10-1/2" wide x 6" high can be used. The cost of 2 hard-wired

unimodules attached together with brackets for the terminal board and mounting is estimated to be as follows:

L O M T
$

Competitive Position

The main competitor is Harmon. Harmon's motion detector unit sells for $ consists of five (5) printed circuit boards housed in a varipak type case, and is not patented at the present time. The unit is "non-vital".

Advantages of Proposed Equipment

1. There is a good probability that patent coverage can be obtained.
2. Vital test features offer sales appeal and are expected to offset slightly higher cost over competitors units.
3. System would be designed at lower operating frequencies and can detect trains at a longer range than comparable Harmon equipment.
4. Operating frequencies compatible with WABCO AFO II would be chosen.

INDUSTRIAL PRODUCTS BUSINESS
APPLICATION FOR PRODUCT DEVELOPMENT (AFPD)

AFPD No. _____

Operating Unit _____

Supplement No. _____

escription of project: Date Submitted _____

PROJECT EXPENSE:

	PRE-DEVELOPMENT	DEVELOPMENT	TOTAL
01 ENGINEERING	$	$	$
02 MARKETING			
03 MANUFACTURING			
04 OTHER			
05 TOTAL PROJECT EXPENSES			
06 CAPITAL EQUIPMENT			
07 TOTAL	$	$	$

PROJECT CATEGORY (Check)

1. New product
2. New market
3. New model
4. Product improvement
5. Cost reduction
6. Other _____

SALES POTENTIAL – 5 YEARS $ _____

TARGETS:

UNIT INVENTORY COST $ _____

UNIT SELLING PRICE $ _____

UNIT GROSS MARGIN % _____

ENGINEERING FINAL RELEASE _____ DATE

MARKET RELEASE _____ DATE

FIRST NORMAL YEAR: 19____

(a) INVESTMENT:

08 TOTAL EXPENSES (line 05) $ _____

09 WORKING CAPITAL _____

10 CAPITAL EQUIPMENT NET _____

11 TOTAL INVESTMENT _____

(b) OPERATING INCOME _____

(c) RETURN ON INVESTMENT (b) ÷ (a) % _____

(d) CASH PAY BACK PERIOD AFTER MARKET INTRODUCTION ____ YEARS

THIS PROJECT _____ WILL/WILL NOT RESULT IN EXCEEDING PROFIT PLAN EXPENSES BY $ _____

THIS PROJECT _____ IS/IS NOT IN STRATEGIC PLANS

_____ GENERAL MANAGER

_____ MANAGER OF MARKETING/SALES

_____ MANAGER OF ENGINEERING

_____ MANAGER OF MANUFACTURING

_____ MANAGER OF FINANCE

_____

_____ GROUP VICE PRESIDENT

_____ PRESIDENT WABCO

_____

AFPD FORM

APPLICATION FOR PRODUCT DEVELOPMENT (AFPD)
SUPPORTING MARKETING DATA AND INCREMENTAL OPERATING INCOME

Operating Unit _____ AFPD No. _____

Supplement No. _____

	MARKETING DATA	19	19	19	19	19
	Served market(s) (description)					
01						
02						
03						
	Incremental sales due to project:					
04	Equipment					
05	Parts					
06	Total					
	Current product sales without project:					
07	Equipment					
08	Parts					
09	Total					
	Total sales with project:					
10	Equipment					
11	Parts					
12	Total					
	% share of market					

	INCREMENTAL EFFECT ON PROFIT					
13	Incremental sales due to project (line 6)					
	Incremental costs and expenses:					
14	Direct material					
15	Direct labor					
16	Variable monufacturing overhead					
17	Direct manufacturing expenses					
18	Depreciation					
19						
20						
21						
22						
23	Total manufacturing costs					
	Increase (decrease) in direct costs and expenses related to project:					
24	Marketing					
25	Engineering					
26	Administration					
27	Total incremental costs and expenses					
28	Incremental operating income					

	CASH GENERATION					
29	% of operating income (line 28)					
30	Add depreciation (line 18)					
31	Cash generation					
32	Cumulative cash generation					

* First normal year – indicate above

APPLICATION FOR PRODUCT DEVELOPMENT (AFPD)
RETURN ON INVESTMENT – CASH PAY BACK

Operating Unit _____ AFPD No. _____

Supplement No. _____

	RETURN ON INVESTMENT				
	19	19	19	19	19
01 Total project expense (from form 1)					
Add increase in working capital due to project based on incremental sales: Amount at end of period:					
02 Receivables					
03 Inventory					
04 Less payables accrued					
05 Working capital					
06 Fixed assets – related to project					
07 Deduct depreciation (accumulated)					
08 Net fixed assets					
09 Total investment (lines 1–5–8)					
10 % Return on investment – incremental operating income (line 28, form 2) ÷ by total investment (line 9 above)					

CASH PAY BACK:

	INVESTMENT (Total lines 01 06 above)	CUMULATIVE CASH GENERATION (line 32, form 2)
19___	_____	_____
19___	_____	_____
19___	_____	_____
19___	_____	_____
19___	_____	_____
19___	_____	_____
19___	_____	_____
19___	_____	_____

Cash pay back = number of years required for cumulative cash generation to equal or exceed amount of total investment.

WABCO

SALES MANUAL

WESTINGHOUSE AIR BRAKE COMPANY
SIGNAL & COMMUNICATIONS DIVISION
Swissvale Post Office, Pittsburgh, Pa. 15218
An American-Standard Company

SUBJECT: RESEARCH & DEVELOPMENT
PRODUCT SPECIALIST RESPONSIBILITIES

I. GENERAL

A. The Product Specialist should:

1. Know his product in depth, or, at minimum, well enough to understand problems or questions presented to him.
2. Recommend product obsolescence and combination/modifiation of products to reduce the overall number of products.
3. Recommend cost reductions within his product line. This does not limit him or exclude others from cost reduction recommendations within his product line, but emphasizes it in this area.
4. Know as much as he can about competitor's products within his product line from information supplied to him by Marketing and evaluation of competitor's products.
5. Keep abreast of technological changes and what impact they have on his product line.

II. SPECIFIC DUTIES

A. The Product Specialist has complete freedom to act on information and/or interpretation matters, such as:

1. Resolve shop problems.
2. Answer Manufacturing, Marketing, Sales, other areas of Engineering questions.
3. Provide information for upgrading of sales literature, such as service specifications.

B. In action matters, the Product Specialist is the incoming contact man, but all replies or his own origination of action shall be documented and leave Engineering via normal line management. Included in this would be items such as:

1. Processing MCR's
2. Requisitions
3. Abstracts
4. Request scheduling of programs into priority system
5. Engineering Letters
6. Engineering Statements
7. Answers to field sales offices that involve policy or significant resources.
8. IT Evaluations

APPROVED

C. Matters pertaining to pricing, delivery, etc., must be handled by the appropriate department.

D. The Product Specialist should keep records of activity and failures in his product line as a basis for recommending product changes and/or improvements.

E. Contact Section Manager when field service may be required.

III. A Product Specialist shall be assigned following the establishment of a product as defined by Research and Development.

RESEARCH & DEVELOPMENT
PRODUCT SPECIALIST INDEX

Product	Section	Engineer(s)
1. ACI	L&C	C.V.Toth
2. Automatic Train Dispatcher	M&R	R.J.Sedory
3. Axle Generator	V&W	R.H.Grundy
4. Battery Chargers	V&W	R.Popp
5. Bells	M&R	W.R.Popp
6. Cab Signaling	V&W	W.B.Dufer
7. Carrier Equipment	L&C	T.J.Fisher
8. Cases	M&R	C.T.Link
9. Control Machines	M&R	R.J.Sedory
10. Converters	V&W	R.Popp
11. Data Modems	V&W	T.J.Hutton
12. GP Boards, Discrete Component Logic	L&C	W.J.Shaw
13. Highway Crossing Hardware	M&R	P.M.Noble
14. Houses	M&R	C.T.Link
15. Hump Locomotive Speed Control (LSR-1)	V&W	H.C.Gillen
16. Identra	L&C	J.W.Kramer
17. Inductors	V&W	R.Popp
18. Inverters	V&W	R.Popp
19. Junction Boxes	M&R	C.T.Link
20. Lightning Arresters	V&W	R.Popp

APPROVED _____

WABCO

SALES MANUAL

WESTINGHOUSE AIR BRAKE COMPANY
SIGNAL & COMMUNICATIONS DIVISION
Swissvale Post Office, Pittsburgh, Pa. 15218
An American-Standard Company

	Product	Section	Engineer(s)
21.	LSR-100	L&C	R.L.Chufo
22.	Mechanical, Misc.	M&R	H.L.Shumaker
23.	Minibonds	V&W	R.Popp
24.	Monorail Div.Systems	PV	R.W.Kennedy
25.	Overspeed	V&W	W.B.Dufer
26.	Power Supplies	V&W	R.Popp
27.	Racks and Cabinets	M&R	R.J.Sedory
28.	Radio Comm. Links	L&C	R.L.Chufo
29.	Reactors	V&W	R.Popp
30.	RCS Systems	V&C	F.V.Blazek-
		L&C	T.J.Hutton
31.	Rectifiers	V&C	R.Popp
32.	Relays, Non-Vital	M&R	V.M.Zabolotny
33.	Relays, Vehicle-Carried	M&R	V.M.Zabolotny
34.	Relays, Vital	M&R	W.R.Popp
35.	Retarders	M&R	H.L.Shumaker
36.	RMU	L&C	T.J.Hutton
37.	Signals	M&R	W.R.Popp-
			C.T.Link
38.	Skates	M&R	C.T.Link
39.	Speedometers	V&W	R.H.Grundy
40.	Speed Regulation	V&W	R.H.Grundy
41.	Station Stopping	V&W	R.H.Grundy
42.	Supervisory Code	L&C	H.R.Shaffer-
			W.J.Shaw
43.	Supervisory Control	L&C	W.J.Shaw

	Product	Section	Engineer(s)
44.	Switches and Controllers	M&R	R.J.Sedory- H.L.Shumaker
45.	Switch Locks	M&R	H.L.Shumaker
46.	Switch Machines	M&R	C.T.Link
47.	Track Circuits	V&W	F.V.Blazek
48.	Transformers	V&W	R.Popp
49.	Train Graph	M&R	R.J.Sedory
50.	Train Stops	M&R	C.T.Link
51.	Valves	M&R	H.L.Shumaker
52.	VR-II	L&C	R.L.Chufo- T.J.Hutton
53.	Weigh Rails	M&R	P.M.Noble
54.	Wheel Detectors	V&W	F.V.Blazek

L&C = Logic & Communications
V&W = Vehicle & Wayside
M&R = Mechanical & Relay
PV = Product Verification

APPROVED _____

RESEARCH & DEVELOPMENT

PRODUCT SPECIALISTS

F. V. BLAZEK - VEHICLE DETECTION

Track Circuits

AFO ---- AFO II ---- High Frequency ---- Mass Transit ----
Phase Selective DC, AC, Coded ---- FR-Hi Shunt ---- Motion Detector

Wheel Detectors

AC, WD-10 ---- DC, WD-20 ---- Electronic, WD-30 and WD-30D ---- Magnetic

RCS Systems (Analog)

RCS-1 ---- RCS-20 ---- CYR Equipment ---- CYS-R Equipment

R. L. CHUFO

LSR-100 ---- Radar, VR-II ---- Radio Links 19,20,22,23,24TSL's for Cont.Sys.

W. B. DUFER

EL and AF Cab Sig.Equip. ---- Univ.Cab Sig.Equip. ---- Overspeed Prot.Equip.

T. J. FISHER

FST ---- Flexicode Carrier ---- Line Tone Equip. ---- Unit Carrier

H. C. GILLEN

Hump Locomotive Speed Control, LSR-1

R. H. GRUNDY

Analog and Digital Speedometer ---- Speed Regulation ----
Station Stopping ---- Axle Generator, AC, DC

T. J. HUTTON - VEHICLE CONTROL - RMU EQUIPMENT

Data Modems ---- 580 Code System ---- RCS-30 ---- 571 Code System
Speed Control ---- VR-II ---- Track Fullness ---- Speed Measuring

R. W. KENNEDY

Monorail Division Systems

J. W. KRAMER

Identra

APPROVED _____

C. T. LINK

Signals

Poles, Ladders, Platforms, Bases, Signal Bridge

Switch Machines (Movements)

T-20,T-21 ML Hand Move. ---- S-20,S-21 ML Spring Move. ---- A5,10,21 ML Air Oper.Move. ---- DA,DA-10 Yd.Dir.Act.Air Move. ---- NA-15 Yd.Pneumatic ---- YM-1,YM-2, YM-3 Yd.Elect.Move. ---- M-22A, B ML Elect.Move. ---- M-3,M-23A,B ML Elect.Move. ---- M-4 RT Elect.Move. ---- M-70 ML & RT Elect. Move.

Houses

Style HM House

Cases

Cast I.Subway ---- RS ---- 17.5"Pole Mtg. ---- 17.5"Base Mtg. ---- B-10

Junction Boxes

Switch Appurtenances - Switch Ground Material

Rods, Gauge Plates, Signal Pipe, Cranks

Train Stops

Pneumatic, Style "S" ---- EM-1 Electric

Skates

S&C Div.(Hand) ---- Ross-Meehan (Hand ---- SA-10, SA-3 Skate Machine

Signs

P. M. NOBLE

Weigh Rails ---- Cantilevers ---- Highway Crossing Packages

Gates

3570 - Lightweight Gate, 3564, 3568

Aluminum Arms and Adapters

Western, Rado, and S&CD Gates

RALPH POPP - POWER SUPPLIES

Transformers

All "NL" and "W" Types ---- General Comm.

Converters - Inverters

All "F" Types, Flexicode 550

Lightning Arresters

USG - High and Low Voltage

Battery Chargers

Constant Potential Power Supplies

"R" and "H" Type

APPROVED _____

RALPH POTT - POWER SUPPLIES (Cont.)

Inductors
VT,VG,FV Types ---- General Comm. and Sig. ---- AC and DC Propulsion Bonds

Unfiltered DC Power Supplies
RQ, HPQ, RPQ

Saturable Reactors
Grain Oriented ---- Toroidal

Minibonds
Communication and Grounding

Filtered Power Supplies
SF, RPF, RQF, F60

Automatic Rectifier
RPW340

W. R. POPP

Vital Relays
DN, DT, DX, DP, FN, Model 15, SLV, TV, PTV, P-4, M, DM, CD
PN-50, PNP, PN-150, PN-250, PP, PV, PC, PF

Signals
Style N,N-2,N-5 ---- Style R,R-2 ---- Style TR,TR-2 ---- Style P-2,P-5,7P-5
H2, H5, HC-33, HC-81, HC-100

Bells
Model 15A ---- AH-10AC ---- Aluminum - (Western Cullen)

R. J. SEDORY - CONTROL PANELS AND DISPLAYS

Control Machines
Style "C" ---- UR,CTC,TCC ---- Style K-50, K-70 ---- Modular Tubuler

Switches and Controllers

Racks and Cabinets
20" and 31" Universal Equip. ---- Comm.Equip. ---- LP-100 ---- Electronic

Automatic Train Dispatcher

Train Graph

H. R. SHAFFER

General Purpose
549, 550, 560, 570

APPROVED _____

W. J. SHAW - SUPERVISORY CONTROL

Gen.Purpose PCB's,Discrete Component ---- IC Code System & Control Machines

H. L. SHUMAKER

Switch Locks

SL-6,6A,SL-20,21,21A,SL-25,26,27 Elect.Lock ---- SL-7 Elect.Lock Timing

Switch Circuit Controllers

Valves

Retarder Control and Switch Valves

Retarders

Mod.31,31A ---- Barney Pit Mod.31 ---- Spring Type Inert ---- Mod.32,Mod.40, 40A,40B,40C,Mod.50A,50B,50C ---- Mod.66,67

Miscellaneous

Aftercoolers ---- Air Compressor Cases ---- Pressure Vessels, Whistles, Air Lines, Oil Buffers ---- Dragging Equipment Detection ---- Switch Point Roller Bearings, Style R ---- Slide Fence Detector ---- Mechanical Detectors -- Bootlegs

C. V. TOTH - ACI

Color, VC-1 ---- Black and White, VL-1

V. M. ZABOLOTNY

Relays - Non-Vital

PT,LP,ORP,PN-150 SO, PN-156, DNL,LP-100,L,LA,L-10,TH,OR,KP,KN,RD,ANL

Relays - Vehicle-Carried

Master, E, DE-8, VE-9, PB, GJ, GJS, GP, GX, PN-59

APPROVED _____

WABCO

INTERNAL CORRESPONDENCE / SIGNAL & COMMUNICATIONS DIVISION

DATE: May 22, 1972

TO: Messrs: E. R. Dubas
H. W. Erikson
H. H. Gudenrath
F. Galdes
K. M. Gaus
B. J. Malloy
R. C. Clark
W. T. Goff
J. P. Matthews
I. F. Cadman
G. J. Cullum
A. Johnson
P. L. Riches

cc: C. F. Wert
W. R. Fisher
A. F. O'Rourke
R. M. Karow
A. E. Jones
C. E. Stipancic

FROM: Mr. J. W. Hansen

SUBJECT: Proposal and Quotation Lead Time

We are in the process of preparing a Sales Manual Issuance 6.11 "Proposal and Quotation Lead Time" but due to a delay in processing we are not getting the issuance out in the time we originally desired. Therefore, you will find a copy of this issuance attached in an informal manner and it will be followed later by issuance to place in your sales manual.

JWH/dm

Attachment

PROPOSAL AND QUOTATION LEAD TIME

The purpose of this issuance is to establish general guidelines for lead times which we require to effectively respond to customer inquiries and specifications with a quotation or proposal. This information is provided so account representative will have the basic information necessary for early discussion with customers to obtain a better understanding of our requirements and schedules, if we are to serve him effectively.

Requests for prices and proper response in the form of quotations and/or proposals vary in detail and complexity from the simplest inquiry for a price on a standard part or piece of equipment to a complete system requiring substantial preliminary engineering design before a list of material and prices can be developed and quoted. Our response to those systems requiring engineering effort is also affected by engineering and marketing manpower loading at a particular time. For this reason, the time required in any given situation may vary from those shown.

Those products and systems requiring new developments, either a hardware design or technological innovation, will usually require longer response times. Approval by Executive Management Product Committee is necessary before firm commitment can be made to customer. Lead times should be designated on a selective basis after review by Marketing Manager.

Listed below are the expected average minimum lead times to respond to inquiries in each business area:

I. Railroad Signaling & Supervisory Control:

Standard hardware not requiring engineering input - 7 Days.
Standard systems requiring application engineering input - 30 Days.
Modified standard or non-standard systems requiring application and development engineering inputs - 45 Days.

II. Railroad Terminals:

Retarders, rebuilds, hevi-car kits, etc., not requiring engineering inputs - 7 Days.
Small to medium yards using previously engineered concepts - 30 Days.
Large yards and those requiring analysis of detailed customer specifications - 45 Days.

III. Highway Crossing Protection:

Standard hardware and control cases - 5 Days.
Special applications requiring engineering inputs - 10 Days.

IV. Railroad Vehicle Carried Systems:

Standard hardware or systems not requiring engineering input - 7 Days
Standard systems requiring application engineering input - 30 Days.
Modified standard systems requiring application and development engineering inputs - 45 Days.

V. Transit Wayside Systems:

Standard hardware not requiring engineering input - 7 Days.
Standard systems requiring application engineering input - 30 Days.
Modified standard systems requiring application and development engineering inputs - 45 Days.

VI. Transit Vehicle Carried Systems:

Standard hardware not requiring engineering input - 7 Days.
Standard systems requiring application engineering input - 30 Days.
Modified standard systems requiring application and development engineering inputs - 45 Days.

VII. Radio Control Systems:

Standard systems - 7 Days.
Special application - 30 Days.

VIII. Vehicle Carried Equipment (EMD Relays, etc.):

Standard items - 5 Days
Items requiring drawing change - 14 Days.

IX. Voice Communications:

Standard 3R, Portable 2.2, 5 Watt Carryphone, etc. -5 to 7 Days.
Modifications of existing products - 10 Days.
TRC Systems - 30 Days.

X. Monorail Division:

Standard hardware not requiring engineering input - 7 Days.
Standard systems requiring application engineering input - 30 Days.
Modified standard systems requiring application and development engineering inputs - 45 Days.

XI. Service Parts and Equipment:

Standard items - 3 Days.
Items requiring drawing change - 14 Days.

WABCO

SALES MANUAL

WESTINGHOUSE AIR BRAKE COMPANY
SIGNAL & COMMUNICATIONS DIVISION
Swissvale Post Office, Pittsburgh, Pa. 15218
An American-Standard Company

SUBJECT: Index - INQUIRIES, ESTIMATES, QUOTATIONS & DELIVERY Section

Issuance	Subject	Date
6.1	Inquiry Forms	8/15/69
6.4	Procedures For Obtaining Delivery Information	3/27/70

APPROVED _____

WABCO

SALES MANUAL

WESTINGHOUSE AIR BRAKE COMPANY
SIGNAL & COMMUNICATIONS DIVISION
Swissvale Post Office, Pittsburgh, Pa. 15218

SUBJECT: Inquiry Forms

The forms on the following pages are samples of those to be used for inquiries and forecast estimates. Headquarters will no longer furnish copies of these forms, but each regional office will receive a photostatic copy of each form for reproduction purposes.

The "Sales Request" (Form SM 6.1A) and the "Project Specification Details" (Form SM 6.1B & C) are used to originate requests for estimates and quotations for projects. They must be completed and always sent in together for projects requiring them.

When the Sales Request and Project Specification Details arrive at headquarters, they will be processed to Engineering, if needed. The estimate or quotation will then be executed, and the Estimate Scope will be returned to the field with the Project Specification Details. The salesman will utilize this information to secure the order.

Upon receipt of the order in headquarters, it will be analyzed by Marketing and Engineering, and a Forecasting Estimate Project Scope Sheet will be returned to the field indicating any variances from what was originally proposed.

The Forecasting Estimate Project Scope (Form SM 6.1D) must be filled out immediately by the salesman for every job on the orders booking forecast as soon as it can be pinpointed by month and year. This form is also to be completed and returned to headquarters for any job which consists of only hardware with little or no engineering involved.

Engineering also will use form SM 6.1D for estimating details and figures for the field and will return this to the field with forms SM 6.1B and/or SM 6.1C.

APPROVED

WABCO

SALES REQUEST

Regional Office _____

Date _____

MCN = _____

1. Request for	Estimate		Comments
	Quotation		

2. Product or System _____

3. Customer _____ Location _____

4. Date Request required _____ Delivery Date _____

5. Originated by (person and department) _____

		Comments
Dept. Planning		
Budgetary		
To place order		
Other		

6. Competitors Quoting			Comments
Competitive Products or System Quoted			

7. Return Information Required

	Comments
Letter with prices	
Formal Proposal	
Brochure	
Plans _____	

8. Project Scope or Specifications

Covering letter outlining requirements	
Covering letter with engineering details	
Written specifications by customers	
Plans _____	
Field Survey Required	
Erection	
Commercial Materials	
Installation supervision or Engineering Assistance	

9. Additional Comments

Signed _____

CTC AND INTERLOCKING

PROJECT SPECIFICATION DETAILS

Customer _____ Location _____

Date _____

Comments

1. System
   - ☐ CTC
   - ☐ Interlocking
   - ☐ Consolidation

   Per Plans _____

2. Control Machine Style
   - ☐ C
   - ☐ TTC
   - ☐ B30
   - ☐ UR
   - ☐ Other

3. Train Graph
   - ☐ Yes
   - ☐ No

   If yes,
   - ☐ 40 way
   - ☐ 57 way

4. Code System
   - ☐ 514
   - ☐ 549
   - ☐ 550
   - ☐ 560
   - Other _____

   A. Type

   B. Communication Media
   - ☐ Line Wire
   - ☐ Microwave
   - ☐ Radio
   - ☐ Leased Line

   C. Carrier Channel _____

Comments

D. No. of trains per day _____
   Peak periods _____

E. Voice requirements
   - ☐ Maintainers
   - ☐ Telephone
   - ☐ Other

F. Any special controls or indications required
   - ☐ Yes
   - ☐ No

5. Vital Relays
   - ☐ Plug-in
   - ☐ Other

6. Track Circuits
   - ☐ AC
   - ☐ DC
   - ☐ Coded
   - ☐ AF

   If Coded,
   - ☐ AC
   - ☐ DC

   If AF,
   - ☐ Modulated
   - ☐ Unmodulated

7. Switch Type
   - ☐ Electric
   - ☐ Pneumatic

   A. If electric, switch machine
   - ☐ M3
   - ☐ M23A
   - ☐ M23B
   - ☐ M4
   - ☐ Other

   B. If electric,
   - ☐ AC
   - ☐ DC

   Voltage _____

   Speed _____

Comments

C. If pneumatic, switch machine — A5 / A21

D. Cylinder size — 5 in. / 7 in.

E. Control Relays — At switch / In Housings

8. Signals

A. Style — R / H2 / H5 / P5 / N2

B. Size — High / Dwarf

C. Signal Lighting — Approach / Steady Lit

D. Lightout protection requirements — Yes / No

9. Electric Locks
A. Type — SL6A / SL21A / SL25 / Other

B. Release — Emer. release / Time release / Supr. control

10. Crossing protection- If required, fill out form _____

11. Housings

A. Linings — Yes / No

WABCO

SM 6.1B

Comments

B. Foundation — Cast iron / Concrete

C. Factory wired — Yes / No

12. Other materials needed — Bootlegs / Arrestors / Transformers / Rectifiers

13. Circuits

A. Office — Solid State / Relay

B. Agreement network — Yes / No

If yes, — Field / Office

C. Signal Control Line Circuits — 2 wire reversible / 3 wire / 4 wire

D. Time Locking — Approach release / Straight time locking

E. Track release of Locking — One Track / Two Track / Time locking

F. Route Locking Sectional Release — Yes / No

Comments

G. Wiring details on circuits — Yes ☐ No ☐

H. Wiring details designed to WABCO standards — Yes ☐ No ☐

If no, Railroad must specify.

I. Circuit sheet size _____

J. Tracing — Tracing paper ☐ Pencil on cloth ☐ Ink on cloth ☐ Cronoflex ☐

14. Power

A. Availability of A.C. power at wayside — Yes ☐ No ☐

Voltage _____

Frequency _____

B. Battery Types — Lead ☐ Nicad ☐ Other ☐

C. Standby requirements _____
recharge requirements _____

15. Project to be erected complete (turn-key) — Yes ☐ No ☐

16. Attach a detailed list of any commercial materials WABCO must furnish.

17. If Railroad has any special standards, attach a detailed list.

HIGHWAY CROSSING PROTECTION

PROJECT SPECIFICATIONS

Customer _____

Location of Installation _____

Date _____

Comments

1. No. of Tracks — Single ☐ Double ☐ Other ☐

2. Type of Operation — Automatic ☐ Manual ☐

   If Automatic — Area warning ☐ Directional Control ☐

3. Type of highway Traffic — One way ☐ Two way ☐

4. Maximum speed of fastest train _____ mph

5. Train switching or stopping in approach zones — Yes ☐ No ☐

6. No. of train movements per day over crossing _____

7. Within the control limits — Switches T or F ☐ Train Signals ☐ Track bonded ☐ Metal gauge rods ☐

Describe:

Project Specifications (Cont.)

Comments

8. Electric propulsion — Yes ☐ No ☐

   If Electric, — AC ☐ DC ☐

   Frequency _____

   Voltage _____

9. Cars & Equip. Standard 4' 8-1/2" — Yes ☐ No ☐ Describe

10. Weight of rails _____ #/yd.

11. Rail Section _____

    4 hole joints ☐

    6 hole joints ☐

12. Ties — Wood ☐ Steel ☐ Concrete ☐ Other ☐

13. Power available at crossing — DC ☐ AC ☐

    Voltage _____

    Frequency _____

14. Standby power required — Yes ☐ No ☐

    A. Battery — Yes ☐

Comments

15. Track Ballast Condition
- ☐ 2 Ohm
- ☐ 5 Ohm
- ☐ 10 Ohm
- ☐ Other

16. Highway at Crossing
- Width _____ ft.
- Angle _____

17. Crossing Signals located
- ☐ Sides of street
- ☐ Center of street
- ☐ Other

FOR NOS. 16 and 17 SUBMIT PLAN WITH INQUIRY

18. Signals
- ☐ Signal with 2 units
- ☐ Signal with 4 units
- ☐ Signal with Side lights
- ☐ Cantilevers
- ☐ Lights on main masts
- ☐ Gates — Length _____
- ☐ "No turn" light

19. Signals to be
- ☐ Aluminum
- ☐ Steel

20. Bells required
- ☐ Yes — # required _____
- ☐ No

Highway Crossing Protection
Project Specifications
(Cont.)

WABCO

SM 6.1C

Comments

21. Signs required
- ☐ Crossbuck
- ☐ SORS
- ☐ Tracks — No. _____

22. Track circuits desired
- ☐ DC
- ☐ AFO
- ☐ Type 'C'

23. Relays required
- ☐ Plug-in
- ☐ Other

24. Cases factory wired
- ☐ Yes
- ☐ No

25. Mast mounted case permissible
- ☐ Yes
- ☐ No

26. Must WABCO furnish commercial materials
- ☐ Yes
- ☐ No

27. WABCO to perform installation
- ☐ Yes
- ☐ No

FORECASTING ESTIMATE PROJECT SCOPE

WABCO

Regional Office _____ Date _____

Customer _____ MCN _____

Location _____ Month Forecase _____

System _____

Control Machine Type & Size _____

_____

Size of Territory _____

Code System & Pertinent Details _____

_____

_____

Retarders _____ Approx. _____

Switch Machines _____ Approx. _____

Signals _____ Approx. _____

Locks _____ Approx. _____

Crossing Signals _____ Approx. _____

Relays ☐ Plug-in ☐ Other ☐ Approx. _____

Houses _____ Approx. _____

Cases _____ Approx. _____

Erection Complete (Yes) ☐ (No) ☐

Factory Wiring (Yes) ☐ (No) ☐

Approximate Commercial Material Furnished _____

_____

Other Details _____

_____

Submitted by _____

Refer to previous estimate - Date _____

Form: SM 6.1D

WABCO

SALES MANUAL

WESTINGHOUSE AIR BRAKE COMPANY
SIGNAL & COMMUNICATIONS DIVISION
Swissvale Post Office, Pittsburgh, Pa. 15218
An American-Standard Company

DATE: 7/20/70
ISSUANCE: 6.4
PAGE: 1 of 1
Replaces issuance
dated 3/27/70

SUBJECT: Procedures for Obtaining Delivery Information

Requests for all delivery information concerning system projects, equipment and spare parts are to be directed to the following, who will respond directly to you:

For signal equipment:

Customer Services Department
Swissvale

For radio equipment:

R. (Rome) J. Blair
Manager Customer Service
Batesburg

Do not request routine delivery information from Market Managers, Marketing Engineers or Engineering Department personnel.

APPROVED

WABCO

SALES MANUAL

WESTINGHOUSE AIR BRAKE COMPANY
SIGNAL & COMMUNICATIONS DIVISION
Swissvale Post Office, Pittsburgh, Pa. 15218
An American-Standard Company

SUBJECT: Index - COMPETITIVE ACTIVITY & ANALYSIS Section

Issuance	Section	Date
7.1	Competitive Product Information	8/15/69
7.2	Lost Business Reports	8/15/69
7.3	Market Share Reports	8/15/69

APPROVED _____

WABCO

SALES MANUAL

WESTINGHOUSE AIR BRAKE COMPANY
SIGNAL & COMMUNICATIONS DIVISION
Swissvale Post Office, Pittsburgh, Pa. 15218

SUBJECT: Competitive Product Information

The Marketing Communications Department through INFO/SERV has extensive files on most major competitors' products and many related products of smaller competitors. These files are available for general use and copies may be obtained on any specific item on request.

Anyone who obtains competitive literature or information should forward this to INFO/SERV for retention in the master files.

INFO/SERV also maintains a file on all competitive advertisements for the past several years as well as a list of all competitive personnel changes.

Competitive Analysis Reports and Competitive Activity Reports will be issued through INFO/SERV. Requests for a specific subject should be forwarded to INFO/SERV.

Following is an index to the INFO/SERV files.

APPROVED _____

INDEX OF INFORMATION IN INFO/SERV FILES

RAILROAD MARKET - INDUSTRY INFORMATION

Financial Information

20.0 Financial condition of railroads 1950+ (general financial information and quarterly statistical reports)
20.01 RR revenues and income (ICC reports)
20.02 Expenses (ICC Reports)
20.03 Capital Expenditures
20.04 Financial regulations (taxes, freight rates, per diem rates, division of revenues)
20.05 Labor Costs (number of employees, payrolls, productivity)
20.051 Unions and labor problems (negotiations, labor agreements, work rules)

Facilities (number/amount of facilities)

20.11 Signaling and interlockings
20.111 Cab signal and train control
20.12 Class yard facilities
20.13 Highway crossings
20.14 Communications facilities
20.15 Track (miles of rock/track, welded rail)
20.151 Track/rail problems (shelling, etc.)
20.16 Rolling stock (number of freight, passenger cars)
20.161 Types of cars (car characteristics, car charts)
20.17 Motive power (number of locomotives)
20.171 Locomotive models and characteristics
20.18 Industrial Railroads

Operations

20.2 Operating statistics (car loadings, ton-miles, quantitative data, statistics)
20.21 Over-the-road operations (signaling operations)
20.211 Unit trains
20.212 Piggyback (LCL)

APPROVED _____

Operations (Cont.)

20.213 Passenger operations
20.214 Maintenance-of-way
20.22 Class yard operations
20.23 Rolling stock problems (heavy car problems, car design, resistance)
20.231 Rolling stock maintenance and repair
20.232 Hot Boxes
20.24 Communications operations
20.25 Accidents (number of accidents, accident reports)
20.25A Accident Investigations
20.251 Grade crossing accidents
20.252 Loss and damage
20.29 RR organization and management (buying influences, buying practices, marketing efforts, leasing)
20.3 Regulatory activities (ICC regulations, government policies)
20.31 Highway Crossing Regulations
20.32 Communications regulations (FCC regulations and rules)

20.4 Mergers (government policy towards mergers and over-all picture of merger situation. Files on each major pending merger)

Trends and Forecasts
20.5 General outlook (historical trends, general forecasts)
20.51 Financial forecasts
20.511 Aberrations (tax credit, strikes, etc.)
20.512 Special forecasts and correlations
20.52 Trends in signaling, communications, equipment
20.53 Plans for coming year
20.54 Research and new techniques (research currently being done, AAR Research Center reports, new technology, eg. lasers)
20.55 Competition from other modes of transportation (shares of intercity freight traffic)
20.56 Coal, electric power and transmission industry

Sources of Information
20.6 General file (bibliographies of sources of information)
20.61 Railroad organizations (AAR addresses, personnel)

Sources of Information (Cont.)

20.611 Railway Progress Institute
20.612 Reports of RR organizations' meetings (AAR committees - RSMA meeting notes)
20.62 Non-railroad organizations - consultants
20.63 Government bureaus (ICC directory)
20.64 Periodicals (Bilbiographies, Railway Age index)

RAILROAD MARKET - CUSTOMERS (U.S. and Canadian railroads)

21. General file (listings of rr's - nicknames, abbreviations, reviews of railroads' activities)
File for each railroad (annual reports, information about customer railroad that is not of general interest, i.e. industry information)

RAILROAD MARKET - COMPETITORS

22. General file (listings of competitors, general information about railroad supply industry)
File for each competitor (annual reports, information about company activities.) personnel, finances, product lines; information about specific products is kept in product/system file)
22.9 Other competitors

5. RAILROAD MARKET - FOREIGN MARKET

50. General file

50.1 Facilities
50.2 Capital Expenditures
50.3 Market Estimates
50.4 Export Statistics
50.5 Sources of Information
51. Africa
51. Asia
51. India
51. Japan

APPROVED_____

RAILROAD MARKET - FOREIGN MARKET (Cont.)

51. Australia/New Zealand
51. Europe
51. Latin America
51. Middle East
52. Foreign Competitors

Note: Information concerning foreign railroads or competitors which is of general interest with regards to RR operations or products/systems is found in domestic railroad market sections.

RAILROAD MARKET - PRODUCTS/SYSTEMS

23.00A General file (listing of products, AT&SF standard signal products list, 1962)
23.00B Prices
23.00C Pictures
23.00D Other products (not elsewhere classified)

Control/Logic Products

23.001 WABCO Relays
23.002 GRS Relays
23.003 Other competitors' relays
23.004 EMD Relays
23.005 Solid state devices
23.006 Fluidics

Electronic data processing

23.01 Computer hardware
23.011 Computer applications
23.012 Car distribution systems
23.02 Code systems-general file
23.021 WABCO
23.0211 Flexicode
23.022 GRS code systems
23.023 Moore code systems

Detection/Identification Products

23.041 Presence detectors (RCA Ve-Det. Link)
23.042 Track circuits
23.043 S&CD AFO
23.0431 GRS's AFO
23.04312 Harmon AFO

RAILROAD MARKET-PRODUCTS/SYSTEMS (Cont.)

23.0432	Others AFO
23.0433	Marquardt ETC and PMC and SRTC
23.044	Wheel detectors
23.045	Broken wheel detectors
23.046	Dragging equipment detectors
23.047	Hot box detectors
23.048	Testing/inspection (AUDIT, SEARCH, test equipment)
23.049	Impact recorders
23.05	Speed indicators
23.051	Clearance detection
23.06	Switch Machines
23.065	Switch accessories (switch heaters, snow detectors, derails)
23.10	Cases and houses
23.07	Repair and re-manufacture
	Accessories
23.111	Transformers
23.112	Rectifiers
23.113	Converters
23.114	Inverters
23.115	Surge suppressors
23.116	Voltage regulators
23.117	Others (batteries)
23.20	Traffic control systems-general file
23.201	S&CD traffic control systems
23.202	GRS systems
23.203	Moore systems
23.204	Other competitors' systems
23.206	Automatic dispatcher
23.207	Signals (mainline signals)
23.208	Power distribution control
23.22	Classification yard systems-general file
23.221	ABS class yard systems
23.222	GE systems
23.223	GRS systems
23.224	S&CD systems
23.225	Foreign systems
23.226	Weighing

RAILROAD MARKET-PRODUCTS/SYSTEMS (Cont.)

23.227	WE Systems
	Highway crossing systems
23.24	WABCO
23.241	GRS
23.242	Raco
23.243	WRRS
23.244	Marquardt
23.245	Servo
23.246	Racon
23.247	Others
23.249	Roundels and Lenses
	Train control systems
23.26	Automatic train operations
23.262	Cab signal and train control
23.264	Satellite locomotive control (RMU)
23.265	Remote control RCS/RCI
23.267	Loading controls
23.269	Deadman control
23.28	Car identification (ACI)
23.29	Train identification (ID and locator systems for alarm)
23.08	Communications products/systems
23.0801	Motorola
23.0802	Electronics Communications Company
23.0803	Marquardt (R. W. Neill)
	Portable radios
23.0811	Motorola
23.0812	WABCO
23.0813	Other
23.082	Portable-mobile radio combinations (Duophone)
	Mobile radios
23.0831	Motorola
23.0832	WABCO
23.0833	Others
23.084	GE radios
23.085	Transit radios
23.086	Loudspeaker
23.0861	Radio paging receivers

RAILROAD MARKET-PRODUCTS/SYSTEMS (Cont.)

23.087 Base stations
23.088 CRC
23.089 Miscellaneous radio equipment
23.0891 Antennas
23.09 Carrier/multiplex systems and equipment
23.095 Microwave equipment/coax transmission lines (long haul)
23.096 Inductive communications (trainphone, minephone)

RAPID TRANSIT MARKET

30.0 Industry information
30.5 Projects and spending
31.0 Customers
31.01 Boston
31.02 Chicago
31.03 Cleveland
31.04 Long Island
31.05 Montreal/Toronto
31.06 Northeast Corridor
31.07 New York
31.08 Philadelphia
31.09 San Francisco
31.010 Washington
31.011 Others
31.012 Foreign
31.013 Pittsburgh
32.0 Competitors
33.0 Products and Systems
33.5 High Speed Trains
IRT Reports

PIPELINE CONTROL MARKET

60. Industry Information
60.2 Operations
60.7 Sub-Station Control
60.8 Slurry Pipelines

APPROVED _____

PIPELINE CONTROL MARKET (Cont.)

60.9 Background Material
61. Customers
62. Competitors
63. Products and Systems
63.1 Automatic Electric
63.2 Dresser
63.3 Moore
63.4 Noller
63.5 Radiation (North Electric)
63.6 WABCO

GENERAL INDUSTRIAL

70. Electronics Industries
70.1 Electronic Component Shipments
70.2 Electronic Markets
75.5 Data Display
80. Automation/Control
85. Electric transmission control
90. Non-Railroad Communications
90.1 Bus Alarm Systems
90.2 Ship Automation
90.3 Parking Control
90.4 Materials Handling
90.5 Highway Traffic Control
90.6 Automatic Fare Collection
Industrial Sales Manuals
Market Plans

APPROVED _____

WABCO

SALES MANUAL

WESTINGHOUSE AIR BRAKE COMPANY
SIGNAL & COMMUNICATIONS DIVISION
Swissvale Post Office, Pittsburgh, Pa. 15218

SUBJECT: Lost Business Reports

A Lost Business Report must be issued by the salesman on every job we do not receive on which we bid regardless of price.

A Lost Business Report also must be issued on every job we did not bid which may have an impact on our business either now or in the future regardless of price. This will include all aspects of signaling and communications - even those in which we do not have a product such as hot bearing detectors, hi-wide load detectors, dragging equipment detectors, etc.

These Lost Business Reports must be completed in full and estimates made where facts are not known and are not obtainable.

Since these reports are used for the quarterly and annual Market Share Reports, their accuracy is of utmost importance.

APPROVED _____

WABCO

SALES MANUAL

WESTINGHOUSE AIR BRAKE COMPANY
SIGNAL & COMMUNICATIONS DIVISION
Swissvale Post Office, Pittsburgh, Pa. 15218

SUBJECT: Market Share Reports

Market Share reporting is a two-fold job:

1. Determine market size
2. Determine WABCO sales

Once these have been determined, a market share or percentage can be derived. Market Share reports include only systems and hardware - no service parts.

Reports Issued:

1. Railroad Signaling
2. Rapid Transit Signaling
3. Railroad Radio

Sources of Information:

1. Clippings from railroad industry magazines
2. Lost Business Reports
3. Competitive activity reports
4. Order bookings forecast
5. Short-range forecast
6. Railroad sales estimates by regional offices
7. Interviews with C. F. Wert and Marketing Managers
8. Bookings, Billings and Backlog Reports
9. Orders over $10,000 report

Procedure:

1. Determine dollar value and competitor on all known lost jobs by sending requests for information to all regional offices. Also get estimates of railroad sales for past year from regional offices.

2. Determine WABCO sales from BBB reports and orders over $10,000 reports.

3. Collect all data from field offices and determine total market by adding up lost jobs. Adjust for unreported and miscellaneous.

APPROVED _____

Procedure (Cont.)

4. Using total market and WABCO sales, determine our market share or percentage.

5. Use order booking forecast and short-range forecast to determine market share forecast. Talk with C. F. Wert and marketing managers and adjust to reality.

How This Information Is Used:

1. Management bases all major decisions on these reports using them specifically to determine our objectives, policies, and budgets.

2. Manufacturing facility uses them as one of the major inputs in analyzing and scheduling shop capability requirements. Data is also used to order raw material and generates inventory.

3. Manufacturing uses the data to plan their annual billings which determine the fixed billing budget. Also it becomes a tool for measuring manufacturing's performance.

Distribution:

W.D. Squires - 9 copies to be distributed to corporate management.

R. W. Foxen
K. Bunnel
C.B. Ramsdell
C. F. Wert
A. Hoogerhyde
W. T. O'Brien
V.J. Poremba
C.E. Stipancic
G. E. Stinson
P.J. Graham
J. W. Hansen
A. E. Jones
R. M. Karow
R. H. Tomlinson
L. P. Tracy
L. G. Phillips
A. F. O'Rourke
W. R. Fisher
I. F. Cadman
S.J. Colcombe

APPROVED _____

WABCO

SALES MANUAL

WESTINGHOUSE AIR BRAKE COMPANY
SIGNAL & COMMUNICATIONS DIVISION
Swissvale Post Office, Pittsburgh, Pa. 15218
An American-Standard Company

SUBJECT: Index - ENGINEERING COORDINATION Section

Issuance	Subject	Date
8.2	Engineering Coordination For System Orders	5/4/70
8.4	Responsibilities For Administering Project Requiring Field Installations	8/15/69

APPROVED _____

A.R. PLS INSERT -

WABCO

SALES MANUAL

WESTINGHOUSE AIR BRAKE COMPANY
SIGNAL & COMMUNICATIONS DIVISION
Swissvale Post Office, Pittsburgh, Pa. 15218

SUBJECT: Engineering Coordination for System Orders

Effective immediately, the following procedure will be used in transmitting progress status reporting:

1. Project Engineers can deal directly with the customer or field office as long as status report (schedule) has not changed from that furnished previously.

2. For all changes regarding job scope, scheduling and delivery of final system must be coordinated through the respective Marketing Engineer. The Marketing Engineer, in turn, will forward the information to the customer through the regional office.

3. When Engineering receives a call from the customer or the regional office concerning schedule slips or changes in project status, the Engineer must refer the caller to the Marketing Engineer who in turn will provide the necessary information.

This procedure is intended to reduce the many unnecessary phone calls, back tracking and resulting confusion which obviously affects our operating efficiency. The Marketing Department does not desire to get involved in the normal managing of a project, but must become involved in those instances where changes have developed as outlined above (ie: management by exception).

APPROVED G Wert

WABCO

SALES MANUAL

WESTINGHOUSE AIR BRAKE COMPANY
SIGNAL & COMMUNICATIONS DIVISION
Swissvale Post Office, Pittsburgh, Pa. 15218

SUBJECT: Responsibilities for Administering Projects Requiring Field Installations

The following is not intended to be a comprehensive coverage of all situations that may develop but should provide guidance for the prime responsibilities in the detection and resolution of any problems evolving from projects requiring field installation, construction coordination and/or system operational check.

Project Engineering Group

Project Manager has prime responsibility for:

1. Making certain full contractual scope of field installation has been defined and documented.

2. Establishing in-plant and field materials and work schedules compatible with customer schedule requirements.

3. Furnishing all necessary plans and documentation as required for field installation work and materials control.

4. Promoting solutions for all problems based on continuing monitoring of:

   (a) Materials delivery(material ordered from Swissvale)
   (b) All phases of job progress in plant and field

5. Providing Manager of Construction and Field Service with current information as required for effective maintenance of installation schedule.

6. Negotiating schedule changes with affected parties based on (3) above, referring any portending customer relations problems to Marketing for policy determination.

APPROVED

7. Determining need for and referring changes in job scope to Marketing for handling.

8. Furnishing engineering assistance (if required) to Construction and Field Service for circuit selection (breakdown) tests.

9. Performing service (operation) tests.

10. Furnishing final "as-installed" plans to customer.

Union Switch & Signal Construction Company

The Manager, Construction and Field Service has prime responsibility for:

1. Reaching mutual understanding with Project Manager as to full scope of field installation obligations.

2. Performing all installation work according to schedule.

3. Procuring construction materials which are U.S.&S. Construction Company responsibility, and which are not ordered by Project Manager.

4. Establishing and maintaining complete control of materials at job site.

5. Arranging day-to-day on-site working plans and schedules with customer.

6. Keeping Project Manager informed of work progress, deviation from schedule or budget, materials problems, customer failure to meet commitments, or other problems affecting job performance.

7. Performing circuit selection (breakdown) tests:

   (a) Requesting engineering assistance of Project Manager when required.

8. Furnishing assistance to Engineering as requested for service (operation) tests.

9. Providing "as-installed" plans to Project Manager.

Marketing

Prime Responsibility for:

1. Clearing with Customer definition of W.A.B.C.O. Contractual installation commitments.

2. Informing Project Manager of full scope of W.A.B.C.O. contractual installation commitments.

3. Maintaining close contact with Customer Management during installation for customer reaction and response:

   (a) Reporting to Manager, Construction and Field Service any installation problems, their possible solutions, suggestions, etc.

4. Responding promptly to requests by Project Manager or Manager, Construction and Field Service for information, policy delineation.

5. Handling directly with customer all problems relating to project scope interpretation or extension.

6. Obtaining formal job acceptance from customer and/or informing Manager, Construction and Field Service the effective "in-service" date for warranty and field service requirements.

Manufacturing

Prime responsibility for:

1. Shipping materials in accordance with the schedule negotiated with the Project Manager.

2. Notifying Project Manager of any plans to ship short and furnishing revised shipping schedule for the "short" items prior to making any partial shipment. (See Note 1)

3. Notifying Project Manager of changes in shipping schedules at the inception of such planned changes. (See Note 1)

4. Keeping Project Manager informed as to status of specific vendor procurement of materials to be shipped directly to construction site by furnishing copies of the following:

   (a) Purchase Orders
   (b) Vendor's promised shipping schedules
   (c) Vendor's shipping notices

Note 1: This is imperative in order to evaluate impact on construction schedules and customer relations.

APPROVED _____

WABCO

SALES MANUAL

WESTINGHOUSE AIR BRAKE COMPANY
SIGNAL & COMMUNICATIONS DIVISION
Swissvale Post Office, Pittsburgh, Pa. 15218
An American-Standard Company

SUBJECT: Procedure For Closing WABCO Engineered Systems Jobs

This procedure covers those systems jobs which are of sufficient size or complexity as to require a Project Manager assigned from Project Engineering.

Purpose

The purpose is to clarify the assignment of responsibility for project management and outline the steps for transfer of customer interface responsibility back to Marketing after a system has been placed on line and operational responsibility accepted by the customer. It is intended that this procedure will reduce the time and expense incurred in closing out projects.

Background

Project Management for systems jobs becomes the responsibility of the engineer assigned upon completion of the scope definition phase after an order is received. This responsibility continues throughout the various stages of a project and includes the keeping of schedules and records to assure compliance with job specifications, scope definition, etc. Such schedules and records are to be complete to the extent that changes in job scope can be identified, responsibility assigned and billings rendered as changes occur as well as for closing out final billing at the completion of a job. Timely recognition and action on scope changes, delays, and additions is of utmost importance.

System Checkout

It is the responsibility of the Project Manager to arrange for system checkout. This responsibility includes whatever liaison is required to establish procedures and schedules jointly with Marketing and the customer. Copies of all schedules and agreements are to be provided to the applicable headquarters marketing section and the Sales Engineer responsible for the account.

A system in-service review meeting is to be scheduled 15 to 30 days in advance of the in-service date whereby Marketing and Engineering gain customer acceptance of the proposed plan.

APPROVED

It is the Project Manager's responsibility to perform any customer liaison work at the time of cut-in to assure smooth progress of the work and permit engineering technical personnel to conduct their work as expeditiously and efficiently as practicable.

When closing yard projects, assistance can be provided by the Transportation Engineer from Marketing for the operation of the yard during the in-service checkout required and as agreed upon at the time the job scope is originally defined. This assistance will include writing operational manuals and training railroad operational personnel in the use of the system as defined in the job scope.

Customer Acceptance

As soon as practicable (preferably within 30 days), after a job has been placed in service, a customer acceptance meeting is to be scheduled, preferably at the job site to review the job, the operation of the system and obtain customer acceptance of responsibility for the continued operation and maintenance of the system. Project Engineering, Marketing, Field Sales, and the customer are to be represented at this meeting. After agreement with the customer that the system is operating as intended in accordance with specification, responsibility for continuing liaision with the customer will pass back to Marketing.

A schedule and plan are to be set up at that time for cleaning up any remaining problems so that final billing can be rendered at the earliest date thereafter.

At this point, responsibility for following system completion progress reverts to a normal customer/marketing relationship wherein all customer requests or questions relative to the job are channeled through Marketing until all remaining items are completed to the satisfaction of the customer.

It is Marketing's responsibility to finalize negotiations with the customer and negotiate product or field services beyond the original scope and/or warranty for the system.

The following check list of items to be considered during the life of a system project order is provided as a guide:

Pre-Order Acceptance:

1. Define in writing to the customer and gain agreement on acceptance criteria for various job phases, systems, etc.

2. Define the environmental and physical criteria for which the performance criteria apply. (Review and re-establish as additions or changes are made to the original conditions).

3. Define the start of hardware and software warranty periods. (This should be done also for any additions or changes).

4. Define the extent of training and documentation to be provided including both technical and operating aspects.

5. Assign a single project manager for the company and have the customer do the same. All business and technical matters to be channeled through these individuals.

Post-Order Acceptance:

1. Maintain schedules and records of job progress (Project Manager).

2. Quote add-ons and deletions as the job scope is changed, requoting the new total job price each time. (Marketing). including schedule changes?

CONFUSING IF MORE THAN ONE CHANGE BEING DISCUSSED.

Closing Out:

1. Obtain written acceptance (acknowledgement) from the customer of each item of other than WABCO materials as well as WABCO engineered equipment and systems as they are placed in service.

2. Schedule and conduct cut-in review meeting with the customer, Marketing and Engineering, prior to the cut-in date. (Preferable 30 days in advance).

APPROVED _____

3. Provide and conduct technical and operating training sessions as agreed upon in job scope or as re-negotiated.

4. Conduct a customer acceptance meeting with the customer, Marketing, Sales and Engineering representation, within 30 days after cut-in. Separate acceptance meetings will be required as each major phase or addition is completed.

APPROVED _____

WABCO

SALES MANUAL

WESTINGHOUSE AIR BRAKE COMPANY
SIGNAL & COMMUNICATIONS DIVISION
Swissvale Post Office, Pittsburgh, Pa. 15218
An American-Standard Company

SUBJECT; Marketing Requests For Estimates, Quotations, Support - Scope Definitions

To initiate engineering action, a new form has been devised and identified as "Marketing Department Request for Engineering Service" (see Page 5 .) This form will be required to accompany marketing requests for engineering commitments which were previously authorized by marketing control numbers (MCN). Excepted from this procedure are those marketing requests upon engineering which involve routine consultation services of less than four hours.

Supervision of requests and administration will be handled through the office of Marketing Department Manager. Issuance of "Request For" forms will be under the authority of the Market Managers (Train Control & Signaling, Terminal, etc.)

The principal objectives of this procedure are:

- - - To insure that Engineering is specifically directed to support those areas of work which are currently in the best interest of the division as determined by the Marketing staff.

- - - To insure that job scope, systems and products are properly defined technically.

- - - To insure that agreement between Marketing and Engineering is reached in advance of work performed and that Marketing has discharged its responsibilities with the customer before proceeding.

To initiate action five (5) copies of the "Request For" form are prepared and distributed as follows:

Original - Markets Manager
3 Copies - Manager Engineering (for Budget Estimate Support or Firm Quotation)
Manager Project/R&D Engineering (for all others)
1 Copy - Manager Marketing Department

In those instances where the required information is to be developed within the Marketing Department without Engineering assistance (except up to 4 hours consultation) a Document Control Number will still be issued and this request form will not be sent to Engineering.

APPROVED _____

Document control numbers are supplied through the office of Manager Marketing.

Engineering Manager is to send back to the Marketing Originator 1 copy with name of person assigned to, date, and DV Abstract/Proposal Number (where applicable) filled in.

When the project is completed Engineering is to return a second copy to the Marketing Originator with project completed by and date filled in.

The terms used on the "Request For" form are defined as follows:

Budget Estimate Support:

A Budget Estimate is made up of historical figures not detailed in nature and not having passed through the Accounting Department. Unknown elements are covered by a contingency factor or by increasing each element by an arbitrary amount. Generally, budget estimates are intended to be higher than those derived by more detailed analysis but are realistic from the customer's planning viewpoint.

Budget Estimates are primarily the responsibility of the Marketing Department, however, Engineering support is available when necessary through the use of the request for form.

Firm Quotation

Figures derived from detailed job plans and scope. Based on proposed material, engineering time, construction forces, etc. This estimate is costed by the Accounting Department and forms the basis of a formal agreement or contract with the customer.

Engineering Support:

Projects requiring engineering services at headquarters which involve consultation time in excess of four (4) hours.

Engineering Field Support:

Projects which require the services of Engineering away from Headquarters and which are not included as a part of a specific job scope. This may include field service to customers after acceptance and which is billable to the customer, assistance to Marketing in making presentations on customer property, investigation of competitive systems or products as directed by Marketing, etc.

Technical Proposal:

Engineering description of a proposed project in accordance with an agreed upon job scope.

Development Abstract/Proposal

The DV Abstract is a synopsis of a proposed development program which along with a marketing abstract is required prior to product committee approval of engineering effort. Solicitation of abstracts by means of the "Request For" form is a supplementary initiating document to handle exceptions to plans or established schedules.

The DV proposal is a document prepared by Engineering following product committee approval. It contains more detailed specifications and cost estimates used to prepare the AFPD document. Ordinarily the proposal is prepared following committee approval, however, this form may be used to make such requests when necessary.

Document Control Number:

Assigned by the office of Manager Marketing Department will be affixed to all correspondence, plans, or other documents in connection with the Request.

Suffix Number:

To be used to initiate further requests on those programs which have previously been assigned a Document Control Number.

APPROVED_____

References:

Plans, correspondence and other pertinent documents associated with the request. Additional documentation may be communicated by reference to the original request. Document Control numbers are to be used on all items transmitted to Engineering.

Job Scope:

A brief statement or description of the project to be performed including identification of customer location and nature of project where applicable.

APPROVED _____

MARKETING DEPARTMENT REQUEST FOR ENGINEERING SERVICE

BUDGET ESTIMATE SUPPORT ☐

FIRM QUOTATION ☐

ENGINEERING SUPPORT ☐

ENGINEERING FIELD SUPPORT ☐

TECHNICAL PROPOSAL ☐

DEVELOPMENT ABSTRACT/PROPOSAL ☐

DOCUMENT CONTROL NO: _____

SUFFIX NO: _____

GENERAL ORDER NO: _____

DATE REQUIRED: _____

REFERENCES:

JOB SCOPE:

For Engineering Use Only:

Prepared By: _____

Authorized: _____

Date: _____

Assigned To: _____

Date Assigned: _____

DV Abstract/Proposal No. _____

Project Completed By: _____

Date Completed: _____

Distribution:

Original: Markets Manager
3 Copies: Manager Engineering (for Budget Estimate Support or Firm Quotation)
Manager Project/R&D Engineering (for all others)
1 Copy: Manager Marketing Department

WABCO

SALES MANUAL

WESTINGHOUSE AIR BRAKE COMPANY
SIGNAL & COMMUNICATIONS DIVISION
Swissvale Post Office, Pittsburgh, Pa. 15218
An American-Standard Company

SUBJECT: Index - MARKETING COMMUNICATIONS Section

Issuance	Subject	Date
9.1	Marketing Communications Functions Assignments	7/20/70
9.2	Advertising Space Solicitation	1/20/70
9.3	Films Available	3/23/70
9.6	Attendance At Trade Conferences, Meetings, Conventions	8/15/69
9.7	Railway Signal Equipment Catalogs Responsibility For Revisions	7/10/70

APPROVED _____

WABCO

SALES MANUAL

WESTINGHOUSE AIR BRAKE COMPANY
SIGNAL & COMMUNICATIONS DIVISION
Swissvale Post Office, Pittsburgh, Pa. 15218
An American-Standard Company

DATE: 7/20/70
ISSUANCE: 9.1
PAGE: 1 of 1
Replaces issuance
of - no date

SUBJECT: Marketing Communications Function Assignments

Listed below for guidance in making direct contacts with the Marketing Communications Section is a list of function assignments.

Advertising Agency Relations	J. W. Hansen
Space Advertising	J. W. Hansen
Sales Promotional Literature	E. M. Zebert
Product Publicity	E. M. Zebert
Sales Proposals - Standard	E. M. Zebert
Sales Proposals - Highly Technical	C. E. Lane
Sales Presentations	E. M. Zebert
Speeches	E. M. Zebert
Business Activity Trade Notices	E. M. Zebert
Product Catalogs	J. W. Hansen
Product Directories, Microfilm, etc.	E. M. Zebert
Personnel News Releases	E. M. Zebert
Exhibits	F. A. Evans
Exhibit Room & Auditorium	F. A. Evans
Public Relations General	J. W. Hansen
Service Manuals	C. E. Lane
Trade Association Relations	J. W. Hansen
Government Relations	J. W. Hansen
Sales & Marketing Conferences	J. W. Hansen
Sales Training Administration	J. W. Hansen
Marketing Trainee Program	J. W. Hansen
Plant Visitor Programs	J. W. Hansen
Sales Manual Administration	J. W. Hansen
Info/Serv Issuances	E. M. Zebert
Printing Production	P. Vestal
Photography	P. Vestal
Literature Stocking & Distribution	F. A. Evans
Graphic Arts	P. Vestal
Inquiry Coordination	E. M. Zebert

APPROVED _____

WABCO

SALES MANUAL

WESTINGHOUSE AIR BRAKE COMPANY
SIGNAL & COMMUNICATIONS DIVISION
Swissvale Post Office, Pittsburgh, Pa. 15218

SUBJECT: Advertising Space Solicitation

Occasionally, our Regional Offices have been solicited by various organizations for the purchase of advertising space in various programs, directories, etc. In some instances negative replies have been handled in the Regional Office.

In most situations, it may be undesirable for the regional sales office to handle such replies where it involves people with whom we are doing business.

If at any time you do not wish to become personally involved in such answers, it is suggested that you send the original request to Marketing Communications (J. W. Hansen) for handling. Our reply will be forwarded in a manner which will not reflect adversely upon your sales relationships with the individuals involved.

APPROVED

WABCO

SALES MANUAL

WESTINGHOUSE AIR BRAKE COMPANY
SIGNAL & COMMUNICATIONS DIVISION
Swissvale Post Office, Pittsburgh, Pa. 15218

SUBJECT: FILMS AVAILABLE

The following films are presently available for loan at no charge to any person or organization requesting a showing.

Prints of these films in limited quantity are available on request from Marketing Communications, Swissvale. In some instances, a print has been assigned to some regional offices.

Expo Express (1967) - Sound, Color, 16mm, 25 min. A description of the design, construction, and operation of the Western Hemisphere's first automated rapid transit system at Canada's Expo 67.

New Gateway (1957) - Sound, Color, 16mm, 20 min. Operation of the P. & L.E. Automatic Classification Yard at Youngstown, Ohio.

Tomorrow's Railroading Today Through Automation (1956) - Sound, Color, 16mm, 12 min. Brief descriptions of CTC, Automatic Classification Yards. Identra and interlocking consolidation.

At This Moment (1955) - Sound, Color, 16mm, 27 min. Broad coverage of modern railroads.

On The Button (1952) - Sound, Black & White, 16mm, 30 min. Description of the first automatic retarder speed control (track circuit type) system at Airline Yard on the Milwaukee Road.

APPROVED

P.L.RICHES, MONTREAL OFFICE

WABCO

SALES MANUAL

WESTINGHOUSE AIR BRAKE COMPANY
SIGNAL & COMMUNICATIONS DIVISION
Swissvale Post Office, Pittsburgh, Pa. 15218
An American-Standard Company

DATE: 8/14/72
ISSUANCE: 9.6
PAGE: 1 of 1
Replaces Issuance
Dated: 8/15/69

SUBJECT: Attendance at Trade Conferences, Meetings, Conventions

Attendance by S&CD personnel at any conference, meeting, or convention where customers of this Division are included is to be based on the following criteria:

1. Those in attendance shall be authorized to attend on the basis of their direct contribution to the meeting or conference in question.

2. The possible consideration that attendance is a reward for past performance is to be eliminated.

3. It is division policy that wives of WABCO personnel are not to attend trade association meetings. However in those instances where it is a generally accepted practice for our customers to bring their wives to such meetings, it shall be the responsibility of the sales managers to regulate attendance of wives. Wives of sales personnel will be requested to attend at company expense when their presence is considered to be of sufficient benefit to WABCO to warrant the additional expense. Under no circumstances are wives to attend at personal expense.

4. The Manager-Marketing will approve final selection of personnel to attend any meeting or conference involving customers of this Division. However, after an acceptable attendance pattern has been established, additional approvals will not be necessary.

APPROVED

WABCO

SALES MANUAL

WESTINGHOUSE AIR BRAKE COMPANY
SIGNAL & COMMUNICATIONS DIVISION
Swissvale Post Office, Pittsburgh, Pa. 15218

DATE: 7/10/70
ISSUANCE: 9.7
PAGE: 1 of 1

SUBJECT: Railway Signal Equipment Catalogs
Responsibility for Revisions

WABCO's new blue Railway Signal Equipment Catalog (RSE) will require constant surveillance to insure that the information concerning our products are kept up to date at all times.

Although Marketing Communications is responsible for the preparation and publishing of this catalog, the responsibility for keeping the information up to date is the direct responsibility of the various Market Managers and their respective Marketing Engineers as outlined in Sales Manual issuance 2.3.

It will be their responsibility to constantly monitor revisions in their respective product lines, to accumulate reported errors and changes, and to periodically request Marketing Communications to revise and re-issue sections of the catalog for which they are responsible.

APPROVED

WABCO

SALES MANUAL

WESTINGHOUSE AIR BRAKE COMPANY
SIGNAL & COMMUNICATIONS DIVISION
Swissvale Post Office, Pittsburgh, Pa. 15218
An American-Standard Company

SUBJECT: Index - CORPORATE & DIVISION GENERAL POLICIES Section

Issuance	Subject	Date
10.1	Signal & Communications Division Province Statement	8/15/69

APPROVED _____

WABCO

SALES MANUAL

WESTINGHOUSE AIR BRAKE COMPANY
SIGNAL & COMMUNICATIONS DIVISION
Swissvale Post Office, Pittsburgh, Pa. 15218

SIGNAL & COMMUNICATIONS DIVISION

PROVINCE STATEMENT

THE DESIGN & PRODUCTION OF SYSTEMS

& RELATED HARDWARE

FOR

CONTROL OF RAILROAD & TRANSIT TRAFFIC

PROTECTION OF RAILROAD & TRANSIT EQUIPMENT

CONTROL & PROTECTION OF OTHER FIXED GUIDEWAY SYSTEMS

COMMUNICATION ON TRANSPORTATION SYSTEMS

BETTERMENT OF TRANSPORTATION SYSTEMS OPERATIONS

REMOTE CONTROL OF TRANSPORTATION & INDUSTRIAL EQUIPMENT

APPROVED _____

New systems orders produce nearly half of our Division's annual bookings. Components and service parts, mostly for expansion or maintenance of systems earlier installed, produce another large portion of the bookings. This emphasizes our need to maintain leadership in system design skills as well as product design skills in order to maintain and expand our business.

Systems orders usually involve development and design of systems, with development and production of related hardware. Systems orders frequently include factory wiring, assembly, installation, and field service.

Most of our sales are for railroad and transit systems which demand ultra-reliable and failsafe process control, linked with communications and data handling. However, our system capability and the variety of hardware we produce have useful applications in other fields.

Control of Railroad and Transit Traffic

Centralized Traffic Control (CTC) is a system for controlling, from a central point, the movement of traffic over the entire main line of a railroad. The system includes remote control of track switches and signals, transmission to central headquarters of pertinent conditions at remote locations, associated communications, and related data handling. CTC speeds up train movements and reduces the number of tracks required to handle the traffic. Many other control systems are available to meet particular needs, involving various degrees of coordination of automated process control with manual supervision. Hardware includes signals, switch machines, housings, relays, code equipment, etc.

The CTC system and related hardware may be adapted to other fields where traffic control from a central point may be advantageous, such as pipelines, street and highway traffic, or large warehouses.

Protection of Railroad and Transit Equipment

Protection is based on hardware and sub-system logic detecting the presence of trains, proper alignment of track switches, dragging equipment, oversize equipment, earth slides, etc.

Protective hardware and sub-system logic may be adapted to other applications where reliability and safety are required, such as remotely or automatically controlled gates or doors, highway slide detection, and obstruction detection.

Control and Protection of Other Fixed Guideway Systems

Protective hardware and sub-system logic may be adapted to other applications where reliability and safety are required, such as remotely or automatically controlled gates or doors, highway slide detection, and obstruction detection.

Control and Protection of Other Fixed Guideway Systems

Detection of the presence of railroad or transit trains, where steel wheels roll on steel rails, is usually accomplished by electrical track circuits, in which direct electrical contact between the wheels and rails actuate relays. Other fixed guideway systems may use rubber-tired wheels, air support, or other means preventing direct electrical contact. Detection sub-systems use electro-magnetic induction, optical devices, or check-in check-out logic. Control is usually transmitted through electro-magnetic induction or by space radio.

Related hardware and sub-systems may be adapted to control and protection of objects moving along, into, or out of fixed paths, such as trucks at loading docks or in tight areas, containers or packages on conveyors, or boats at docks.

Communication on Transportation Systems

Communications hardware and sub-systems produced by S. & C. Division employ space radio, electro-magnetic induction, or direct wire. Space radio and inductive systems usually are used between mobile units and fixed base stations or other mobile units; portable mobile units are available. Direct wire usually is used between fixed points, with DC, AC, or carrier transmission. Multiple controls or indications are provided by tone modulation or digital codes, with or without voice facilities.

S. & C. Division hardware may be used in many fields where voice, digital, or tone communications are required.

Betterment of Transportation Systems Operations

Total Terminal Control (TTC) is an integrated management system for controlling the movement and servicing of freight cars within a terminal, for maintaining the inventory of car location, for providing timely data for management by exception, and for facilitating associated paper work. TTC speeds up the sorting of cars, reducing the number of cars required to handle the traffic. This comprehensive system includes automatic control of the speed of free-rolling cars, automatic routing and tracking, and suitable management visual or hard copy outputs. This system employs an on-line, real-time process control, stored program digital computer with peripheral gear such as typewriters, line printers, card readers and punches, and cathode ray tubes. Hardware produced includes radar and other electronic equipment, electro-pneumatic retarders, switch machines, wheel detectors, track circuits, automatic car identification, and relays.

The system and product capability required in developing the TTC system may be applied to other fields requiring the coordination of process control and related data handling, such as the movement and inventory control of containers in warehouses.

Remote Control of Transportation and Industrial Equipment

The speed and operation of railroad locomotives are controlled remotely by space radio from portable units, base stations, or as slaves from another locomotive in the same train. Similar techniques are used for control of tractors in dangerous areas, such as for coke loading in steel mills. Hardware includes communications equipment, speed sensors, and solid state and electrical or pneumatic control components.

Remote control may be applied to any self-propelled vehicles, such as cranes, tractors, or bulldozers, and has particular advantages where environment is dangerous or where control precision is required.

WABCO

SALES MANUAL

WESTINGHOUSE AIR BRAKE COMPANY
SIGNAL & COMMUNICATIONS DIVISION
Swissvale Post Office. Pittsburgh, Pa. 15218
An American-Standard Company

SUBJECT: Index - MISCELLANEOUS Section

Issuance	Subject	Date
12.1	Instructions & Procedures For Consultants To AAR-C&S Committees	2/16/70
12.2	Procedures For Regional Office Personnel Visiting Swissvale	7/10/70

APPROVED

PLR.
AG - file in Sales manual - where is it?

WABCO

SALES MANUAL

WESTINGHOUSE AIR BRAKE COMPANY
SIGNAL & COMMUNICATIONS DIVISION
Swissvale Post Office, Pittsburgh, Pa. 15218

DATE: 2/16/70
ISSUANCE: 12.1

SUBJECT: INSTRUCTIONS & PROCEDURES FOR CONSULTANTS TO AAR-C&S COMMITTEES

These instructions & procedures are to be followed by all S&C Division personnel assigned as consultants to all AAR-C&S Section Committees.

Basis for Assignment

Each consultant was selected because of his familiarity with the committee subject assignments and because he is working on that or a related subject on a day-to-day basis.

Selections were made because of the confidence WABCO has in each individual's experience and ability to properly represent this company in an organization of customers.

Responsibilities

WABCO consultants are to provide technical assistance to the committee members to the extent of his capabilities. If the subject being discussed is unfamiliar, or if the required detailed information is not readily obtainable, there should be no hesitation to indicate that the answer is not known and that additional information will be obtained from Swissvale.

If technical assistance is required from Swissvale engineering, the request should be handled through the AAR - R. & E. Coordinator if available, otherwise go directly to the source of information, keeping the R. & E. Coordinator informed of any action taken.

If at any time the subject matter to be discussed by a committee requires knowledge beyond that of the consultant, request help from other engineering personnel even to the extent of having that person attend a committee meeting. Requests for such additional attendance at committee meetings should be made through the R. & E. Coordinator.

Be positive, not negative, in any approach to an assignment.

APPROVED [signature]

WABCO Philosophy

Basic company philosophy concerning your committee assignments:

1. WABCO is a modern, technically oriented company organized to serve the railroad industry at a profit to both the customer and WABCO.

2. WABCO products and systems are designed and manufactured to meet exacting safety requirements with old line standards of quality.

3. Emphasis should be on "systems engineering" capability - - not "hardware".

4. Help to keep and improve our image of an upright, honest, competent organization.

Customer Complaints & Requests

As a result of a consultant's exposure to many of our customers, he may expect to receive requests, complaints, etc., that are not related to the committee assignments. All complaints or requests of such nature should be courteously received with as little comment as possible. Then immediately inform the Regional Manager assigned to the customer involved.

Do not attempt to answer marketing questions such as price, terms and conditions, deliveries, sales volumes, etc., without direct authority from the Marketing Department. Refer such questions to the appropriate Regional Manager if the request comes from an individual customer, or to the AAR Marketing Coordinator if it involves a committee assignment.

Committee Intelligence

Although a copy of all committee reports are received by the AAR Marketing Coordinator and R&E Coordinator, additional information reports are to be prepared by each consultant following every committee meeting outlining discussions and actions of the committee that may or may not appear in the official minutes of the meeting.

Such items should include:

1. Action taken and approved.
2. Suggestions for action not approved.
3. Significant discussions on any subject.
4. Significant trends in C&S Section policies.
5. Significant discussions indicating the direction of future trends in product requirements.
6. Information & comments made by competitive consultants.
7. Committee requests for information to be supplied by WABCO.

Copies of such reports are to be sent to both the Marketing & the R. & E. Coordinator within one week following the committee meeting.

Competitive & "Side Bar" Intelligence

Consultants must be constantly on guard against disclosure of any information about WABCO that would benefit our competitors. Consider every customer a potential pipeline to the competitor. Do not gossip.

At the same time be constantly on the alert to obtain competitive information and report any such information, including gossip. to the Marketing Coordinator. Such information can often be obtained during the committee meetings, as well as during less guarded moments before and after the meetings.

Do not discuss with anyone outside the WABCO organization internal S&C Division or WABCO problems.

Personal Behavior

Do not criticize anyone in the WABCO organization or in the organization of our competitors or customers.

Do not put either yourselves, your superiors, your subordinates, or any other employee or officer of WABCO in an embarrassing position by offhand or uncomplimentary remarks to anyone.

Avoid excessive alcholic consumption.

Do not use ungentlemanly language.

Dress like gentlemen, clean shirt, well pressed suit, clean haircut, clean fingernails, no beards.

Consultants represent WABCO and his appearance and actions are a reflection of this company.

Be helpful, but not in a degrading or humiliating manner.

Consultants represent the largest and most successful company in this industry. Be proud of your company and make sure your pride shows.

APPROVED_____

Avoid political entanglements among customers or other suppliers.

Help build the stature of your field sales engineers. Opportunities will be presented if individual customer problems turn up -- simply refer the customer back to the sales engineer, or see that the sales engineer carries your answers back to his customer.

Miscellaneous

Letters of invitation to your committee meetings will be received from the Secretary of the C&S Section. Prompt reply should be made advising whether you plan to attend, or send a substitute. Copies of replies should be sent to the Regional Manager in the region where the meeting is to be held and to the R&E and Marketing Coordinators.

At mealtimes, our salesmen and other suppliers' salesmen may be in attendance. If so, leave these arrangements up to them. Contributions may be requested for entertainment expense and lunch, or it may be dutch treat. Learn and follow the custom for that particular committee and location, since practice varies somewhat depending on the committee and location.

Expect to find a "new look" developing in the AAR because of Tom Goodfellow's (President AAR) aggressive actions and the effect of Federal Railroad Administration policies.

Questions concerning these instructions and procedures should be directed to either or both the R. & E. and Marketing Coordinators.

WABCO

SALES MANUAL

WESTINGHOUSE AIR BRAKE COMPANY
SIGNAL & COMMUNICATIONS DIVISION
Swissvale Post Office, Pittsburgh, Pa. 15218

SUBJECT: Procedures for Regional Office Personnel visiting Swissvale

In order to utilize time more efficiently during visits to Swissvale by Regional Office Personnel with or without customers or prospects, the following precedures are to be followed:

1. The respective market manager or his business area marketing engineer is to be advised as far in advance as possible (preferably by letter).
   a. Purpose (s) of visit.
   b. Person (s) or section to be contacted.
   c. Names of other persons (customers etc.) accompanying you.
   d. Date and time of expected arrival.
   e. Date and time of expected departure.
   f. Suggested schedule showing subjects, person(s) to be seen, and estimated time required or allowed.
2. A copy of such letter is to be sent to the marketing department secretary (Miss Anderson) for coordination and if requested, to obtain room reservations as required.
3. The respective marketing manager is responsible for scheduling all Swissvale contacts concerned with his respective market area including personnel in Customer Services Department.

APPROVED

4. Conferences should be scheduled whenever possible at locations away from telephones and other disturbances so that the business being discussed can be handled quickly without interruption.

5. Suitable office space with telephone service will be provided in marketing for visiting personnel. The marketing department secretary (Miss Anderson) will advise location upon request.

APPROVED _____

WABCO

SALES MANUAL

WESTINGHOUSE AIR BRAKE COMPANY
SIGNAL & COMMUNICATIONS DIVISION
Swissvale Post Office, Pittsburgh, Pa. 15218
An American-Standard Company

SUBJECT: Company Cars - Personal Use
Personal Cars - Company Use

In order to provide a realistic approach to the handling of Company cars, the Company will permit the personal use of the Company cars by our sales people and qualified members of their family (responsible members of the family, covered under the family insurance policy - See Note A) when such vehicles are not being used on Company business. It is required, however, that on each personal use of the Company car, mileage be accurately recorded and that the Company be reimbursed at the rate of 5¢ per mile.

This system must be implemented and used with discretion since we do not have Company cars for all employees. We consider such situations as the return to home from a Company trip and the return of the car to the office the following morning as Company expense. We do consider the use of a Company car to drive home at night and return in the morning as a personal expense item for which the Company should be reimbursed. There are many items of this sort which should be treated separately and in good faith in fairness both to the Company and its employees.

Cars put to personal use by employees shall have detailed records kept of the mileage involved and at the end of the expense period, a copy of the record plus reimbursement should be made to the Company at the rate of 5 ¢ per mile. This reimbursement should take the form of a personal check made out to WABCO by the user and the checks involved forwarded to Swissvale for disposition and credit to your Regional Office. The purpose of this method of handling is to provide an audit trail on personal use via Swissvale rather than bringing your office records into the general audit picture.

APPROVED

For your additional information, we quote below from the company policy manual regarding automobile liability insurance:

EMPLOYEE OWNED AUTOMOBILES

The policy affords the Company protection for any liability arising out of an employee using his own or any other vehicle not owned by the Company while on Company business. However, no protection is afforded the employee, and this policy is in excess of the employee's insurance.

Any employee-owned or rented automobile that is used for both personal and Company business must be insured by the employee with bodily injury limits of at least $25,000/50,000.

INSURANCE ON LEASED CARS

Automobiles leased to the Company or its divisions under long-term lease agreements are considered by the insurance carrier to be an owned automobile. Cars leased under short-term agreements from rental agencies such as Hertz or Avis are usually rented with liability insurance provided for the benefit of the rental company and WABCO. Our policy affords excess protection over the limits afforded by the rental company.

No collision or physical damage coverage is to be purchased when leasing under short term agreements from rental agencies.

APPROVED _____

Note A

AUTOMOBILE INSURANCE

A) Liability - The corporate policy provides all employees and members of their households with full 24-hour personal liability protection, whilst they are driving with proper permission, any company owned or leased vehicle, or any vehicle rented on a short-term basis for the primary purpose of conducting the business of American Standard Inc.

Personal protection is not provided in the following instances:

1) While the employee is operating a personally owned motor vehicle, whether on company business or not.

2) For the causing of bodily injury to a fellow employee of American Standard Inc., or for the causing of property damage to the real and personal property of American Standard Inc.

In the above instances, only the liability and interests of American Standard Inc., if any are covered by the corporate policy.

It is expected that any employee owning his own motor vehicle will be prudent enough to purchase a personal Automobile Insurance Policy, whether required by state law or not.

Through a combination of policies, that coverage which is afforded the employee is worldwide and will protect him against suit whether brought in the U.S. or another country. The notable exception is Mexico, where employees must buy a Mexican Automobile Policy at the border.

The dollar limits of the protection afforded to the employee under the corporate policy are well in excess of any limits which may be required by any state or country.

B) Physical Damage - It is the policy of American Standard Inc. to self-insure Comprehensive Fire and Theft and Collision. We have been given to understand by the insurance company that they have recently, at various locations throughout the country, been inundated with physical damage claims from American Standard employees. Except in special cases for specific types of motor vehicles, (usually heavy equipment) where coverage has been requested by a fleet manager, the corporate policy DOES NOT afford first-party physical damage coverage.

C) "Drive Other Car" Coverage - This coverage is NOT available to employees under the corporate policy. However, it is usually included in most Family Automobile Policies. If the employee does not carry a Personal Automobile Policy, it is possible to purchase, in most states, a separate Automobile Non-Ownership Policy.

This coverage is designed to protect the individual when he borrows or rents a car and is applicable in the following manner:

1) If your borrow your neighbors car with his permission, and as a result of its operation become the subject of a third-party suit, your neighbor's policies would provide you with primary coverage. The "Drive Other Car" provision in your Family Automobile Policy, or Automobile Non-Ownership Policy would act in excess. However, if your neighbor did not have insurance, then your insurance would act as primary coverage.

This department strongly recommends that employees make sure that such coverage is included in any Family Automobile Policy, or if they do not own a motor vehicle, it is recommended that they purchase, for their own protection, an Automobile Non-Ownership Policy.

APPROVED _____